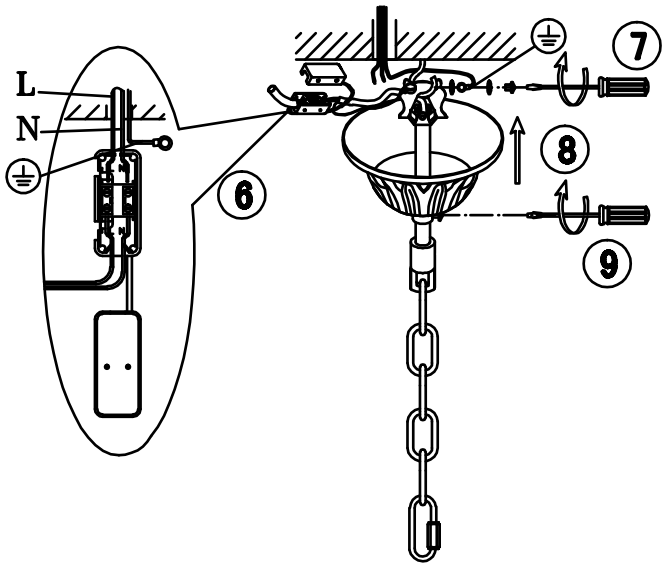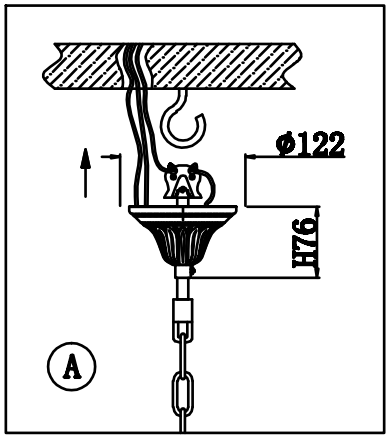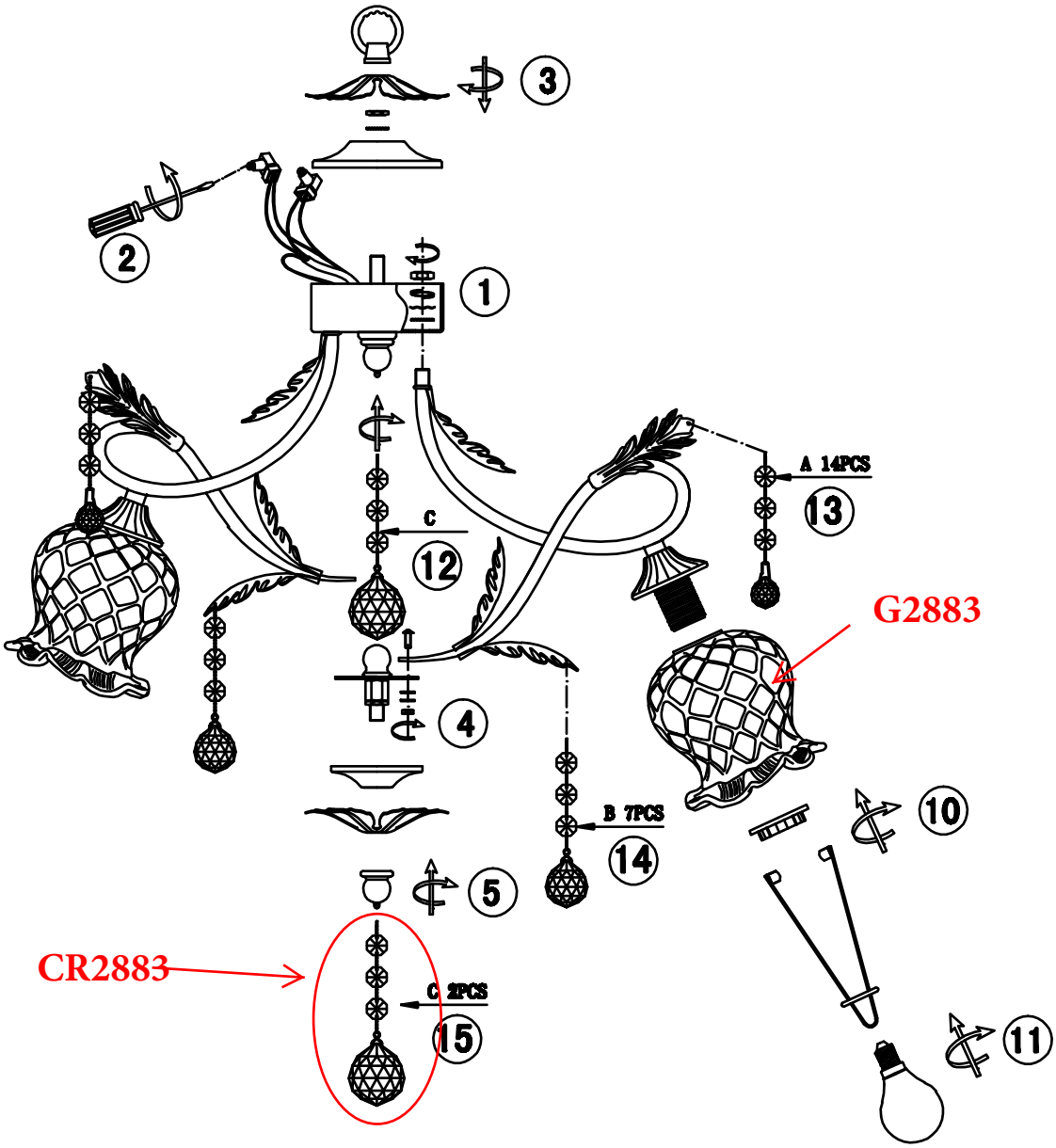INSTALLATION INSTRUCTION ODEON LIGHT ART.2883/7