ODEON LIGHT INSTALLATION INSTRUCTION

Item No.: 2758/6C

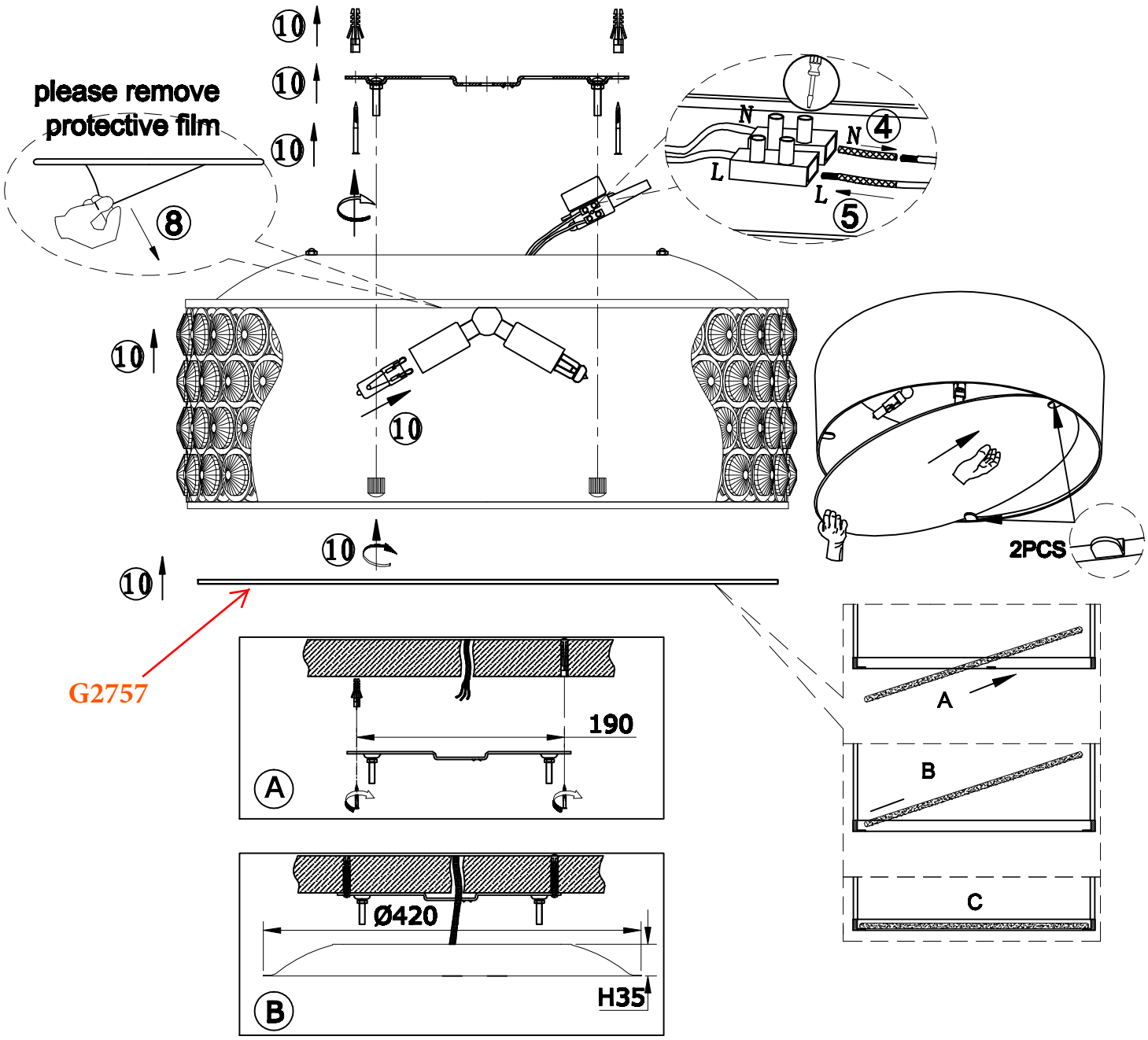

FEATURE

●220-240V～50Hz

●Lamp Type: G9 6× MAX 42W

The lamp can be only indoor used

If in doubt,consult a qualified electrician or contact your retail outlet. Ensure that you always install the fitting to the relevant regulations.Certain regulations indicate that lighting fittings should be installed by a qualified electrician.