ODEON LIGHT INSTALLATION INSTRUCTION

Item No.: 2751/5C

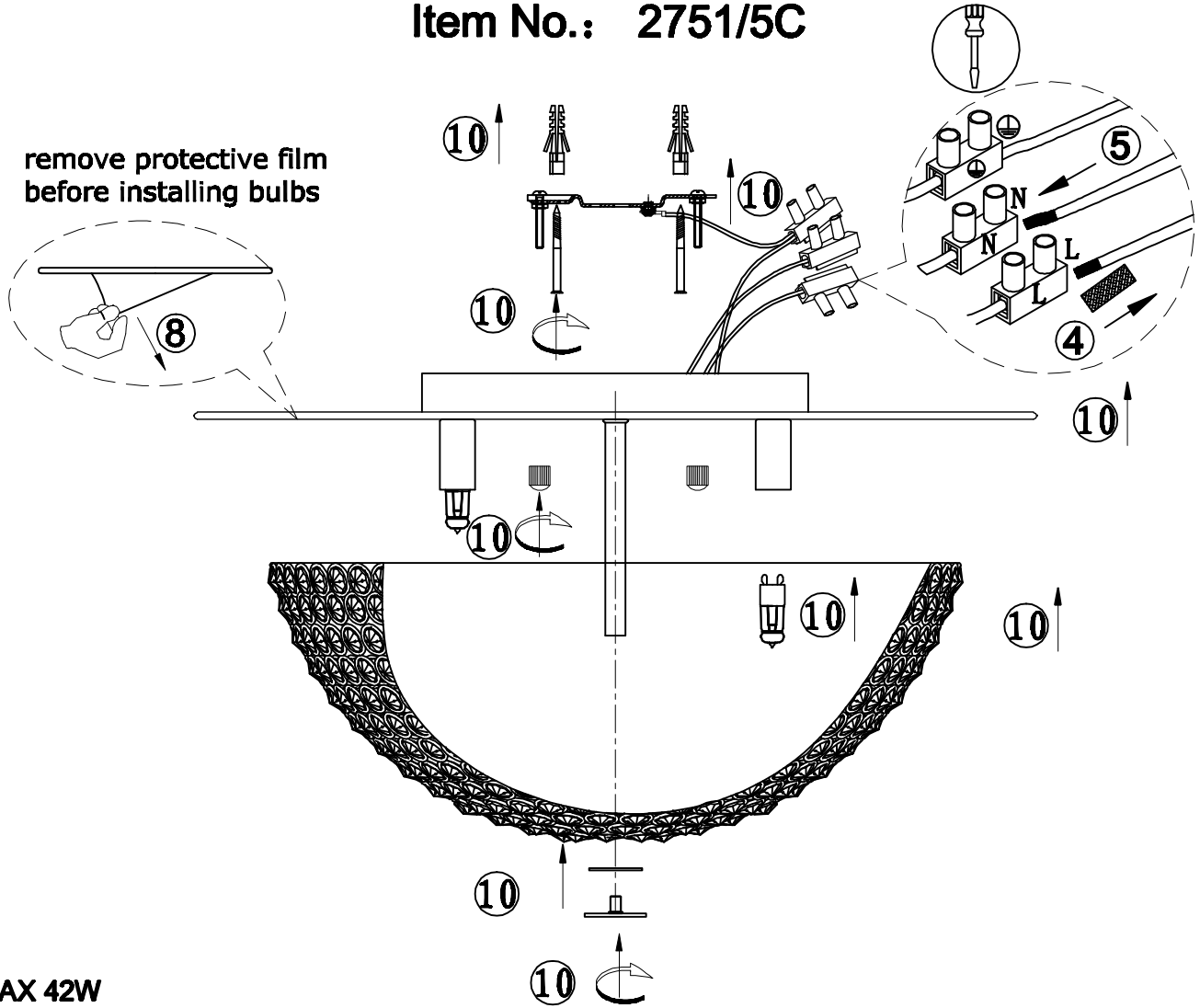

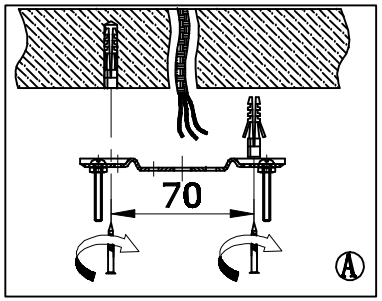

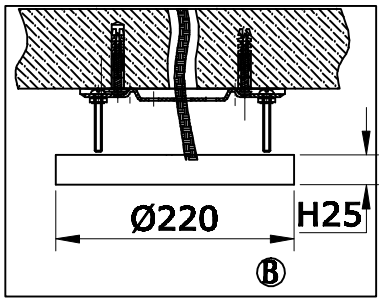

FEATURE

- 220-240V～50Hz
- Lamp Type: G9 5× MAX 42W

The lamp can be only indoor used If in doubt,consult a qualified electrician or contact your retail outlet. Ensure that you always install the fitting to the relevant regulations.Certain regulations indicate that lighting fittings should be installed by a qualified electrician.