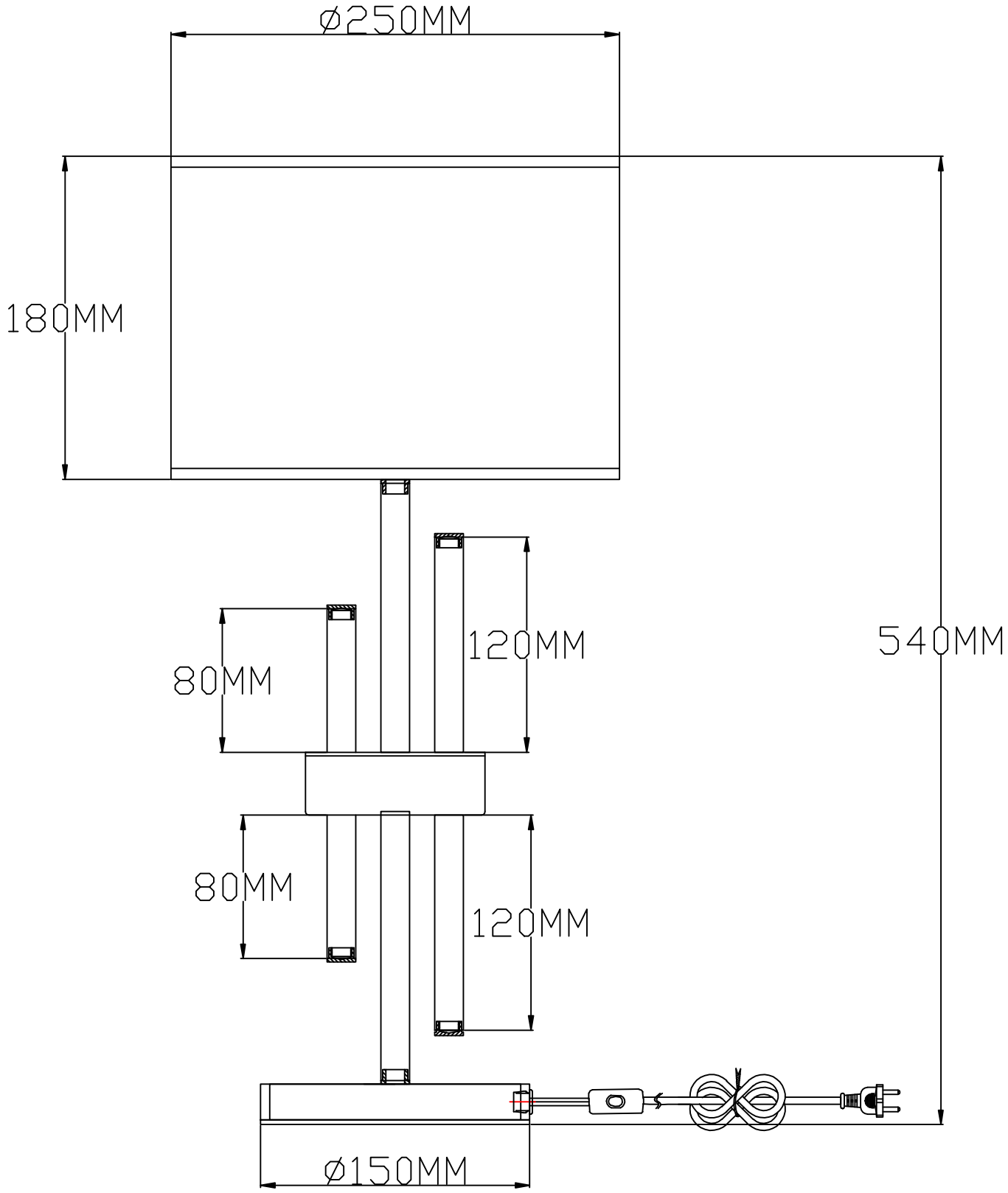
Ø250MM
180MM
540MM
120MM
80MM
80MM
120MM
Ø150MM