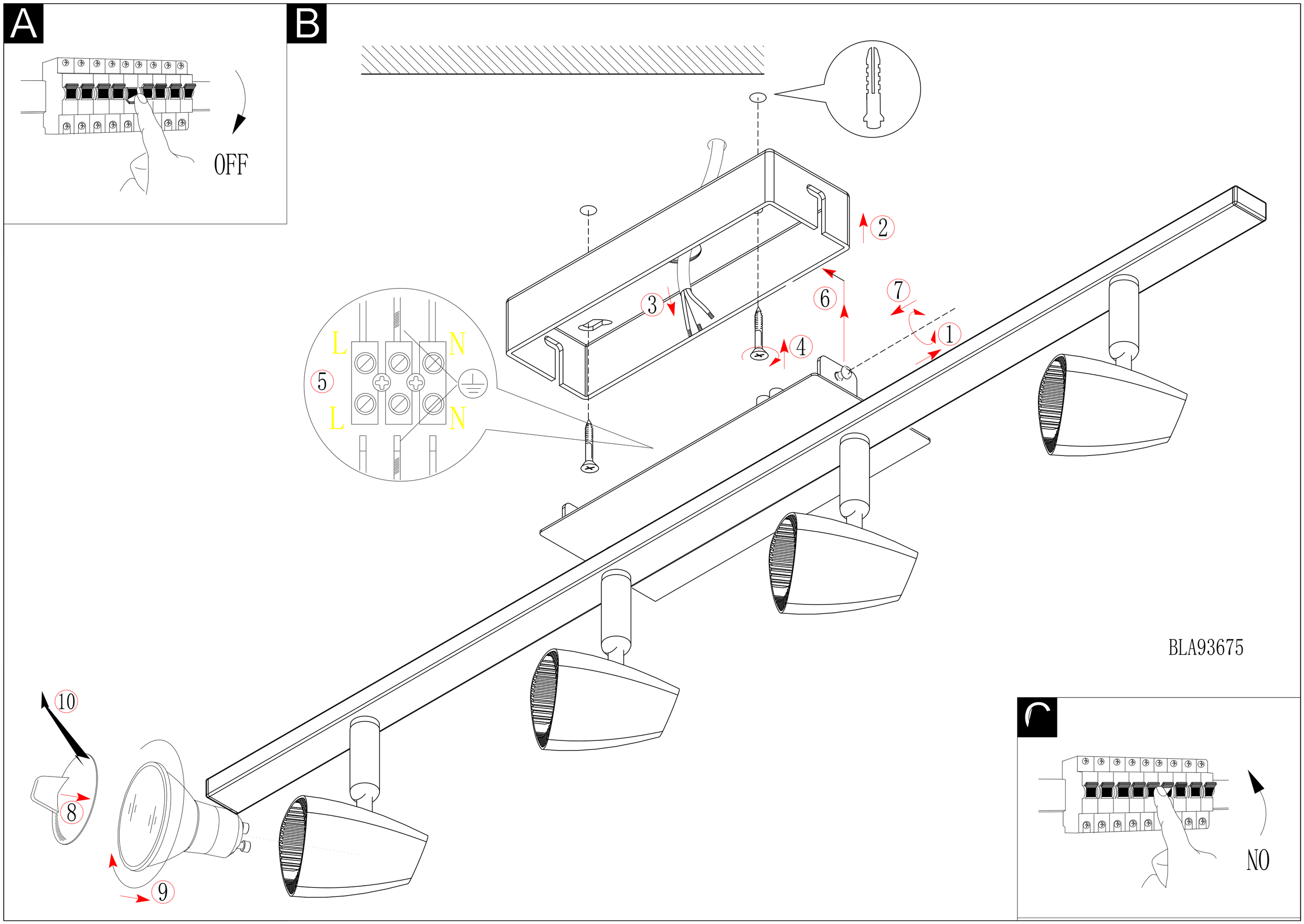
A
OFF
B
L
N
L
N
5
1
2
3
4
6
7
8
9
10
BLA93675
NO