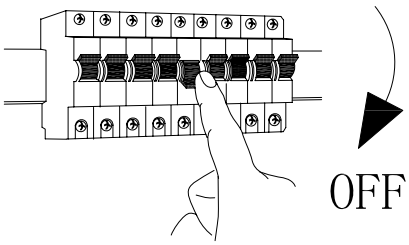

A

B

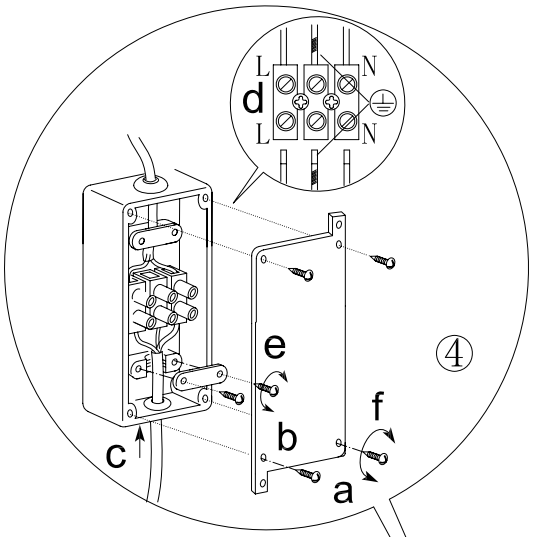

④

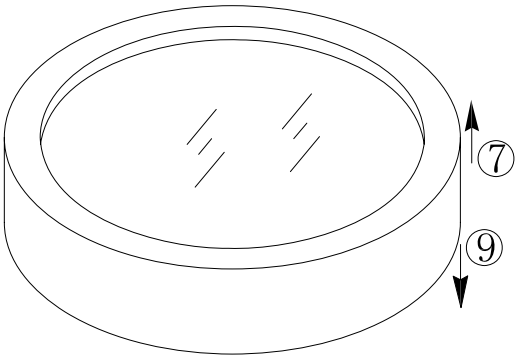

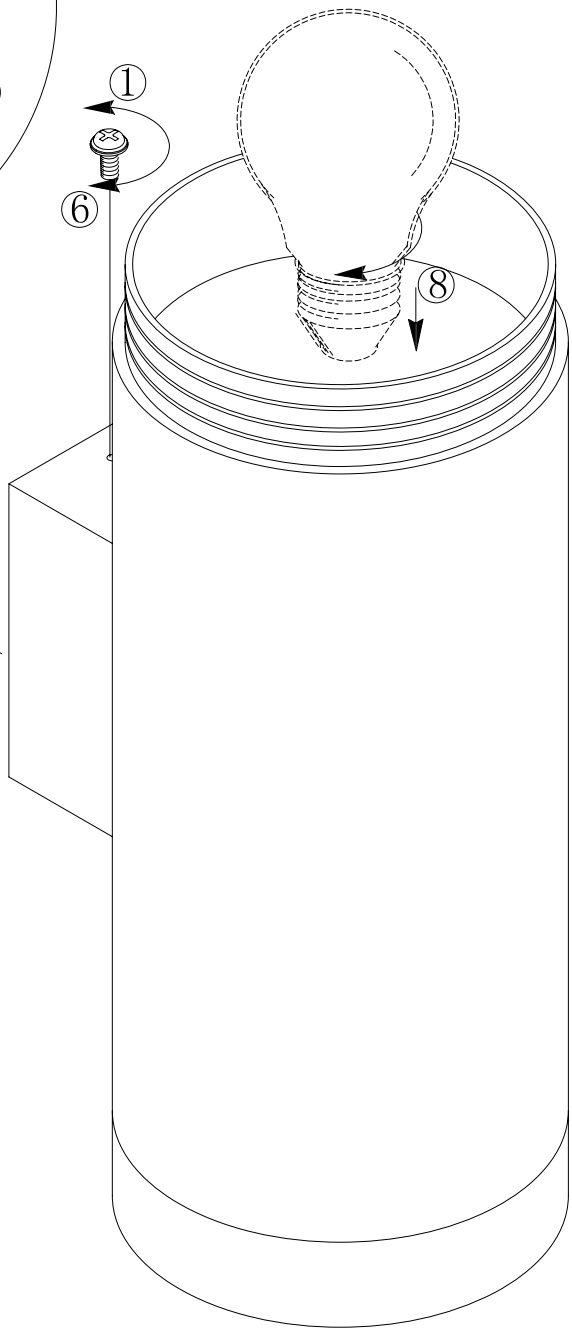

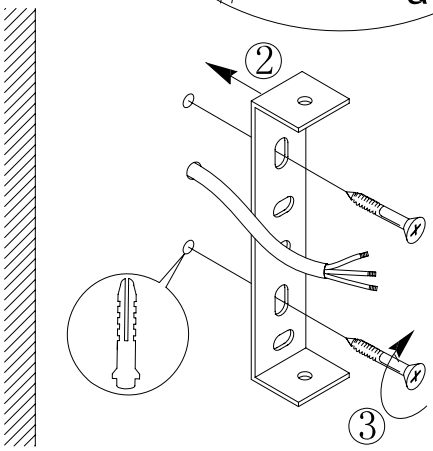

⑤

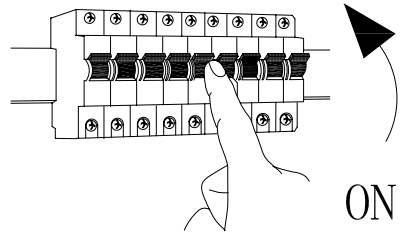

C

BLA90121