ENGLISH

Specification of installation

In order to ensure safety use ,please notice the following items:

- Read and understand the whole Specification.
- Suitable for the use of 220~240V and 50~60Hz.
- Please wear gloves as installment and avoid rot on the surface of plating.
- Must be installed on the fixed places and be checked annually.
- Please turn off the lighting source by soft cloth as cleaning prohibited to use of rotted detergent.
- Please connect with the local sales service center when there are any abnormality.

CEILING PAN SIZE

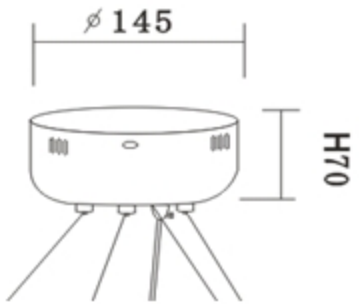

FIXTURE SIZE

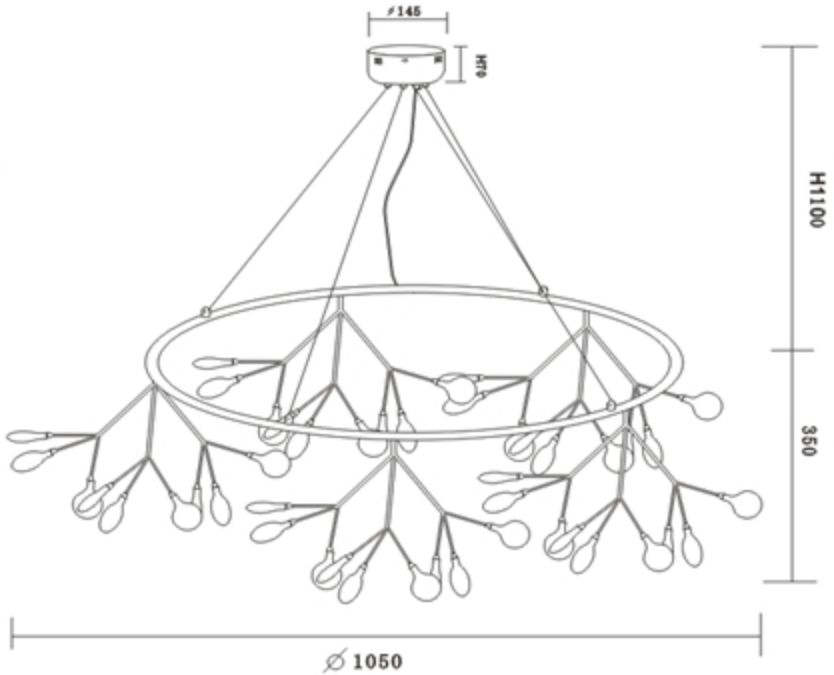

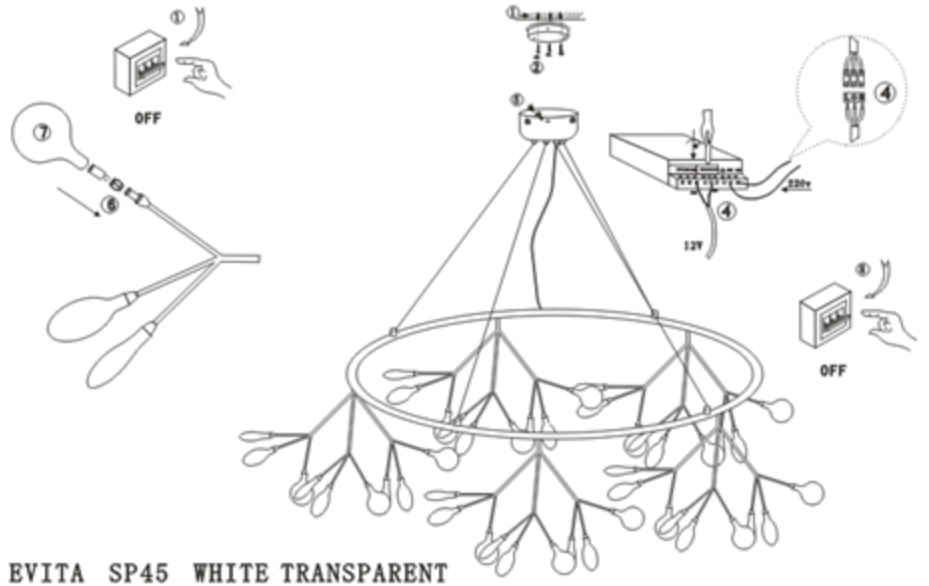

EVITA SP45 WHITE TRANSPARENT