ARTE LAMP

ASSEMBLY INSTRUCTION

A7556PL-3AB

ИНСТРУКЦИЯ

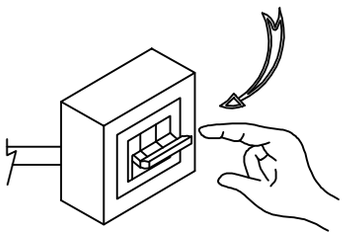

OFF 1

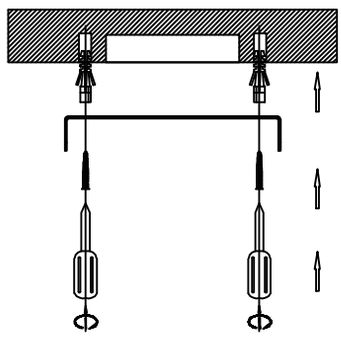

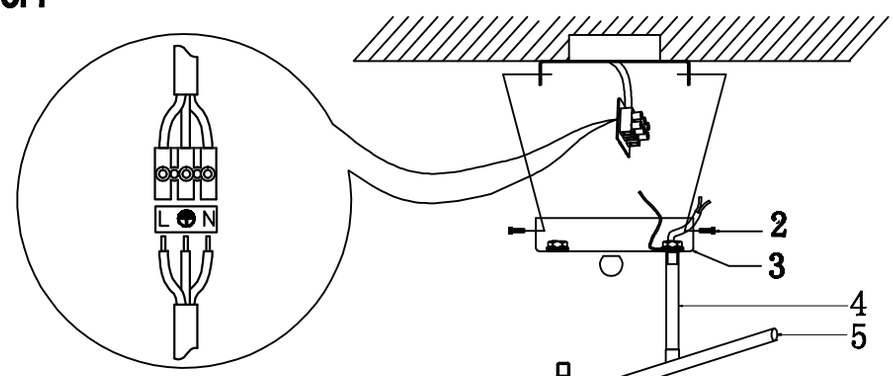

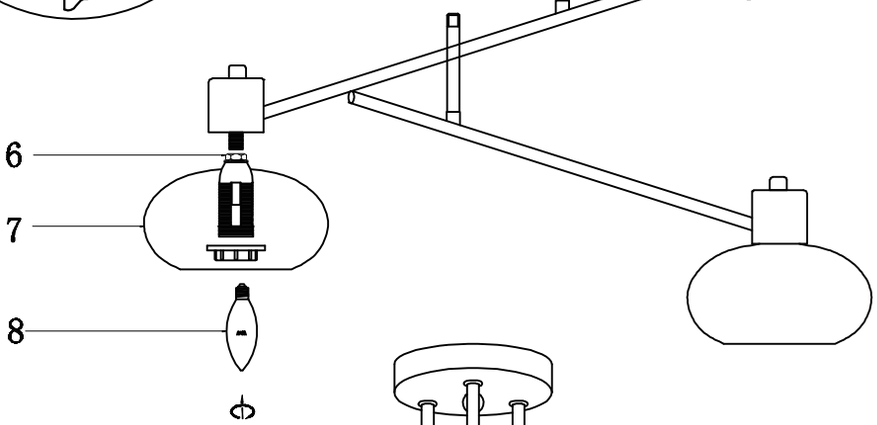

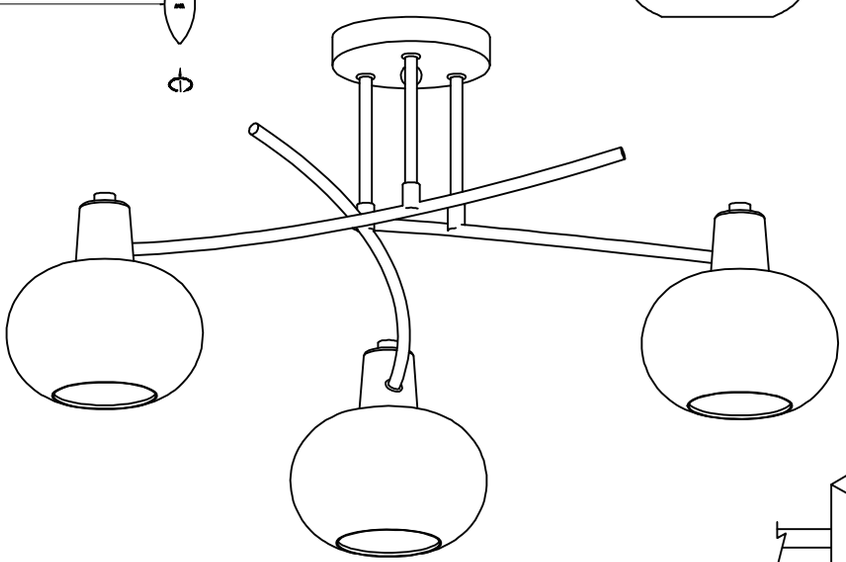

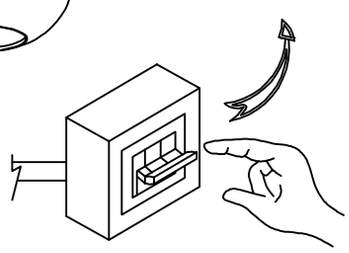

ON 9