ARTE LAMP

ASSEMBLY INSTRUCTION

A

ИНСТРУКЦИЯ A7301PN-1PB

OFF

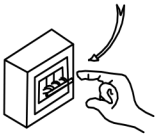

1

ON

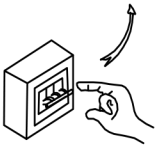
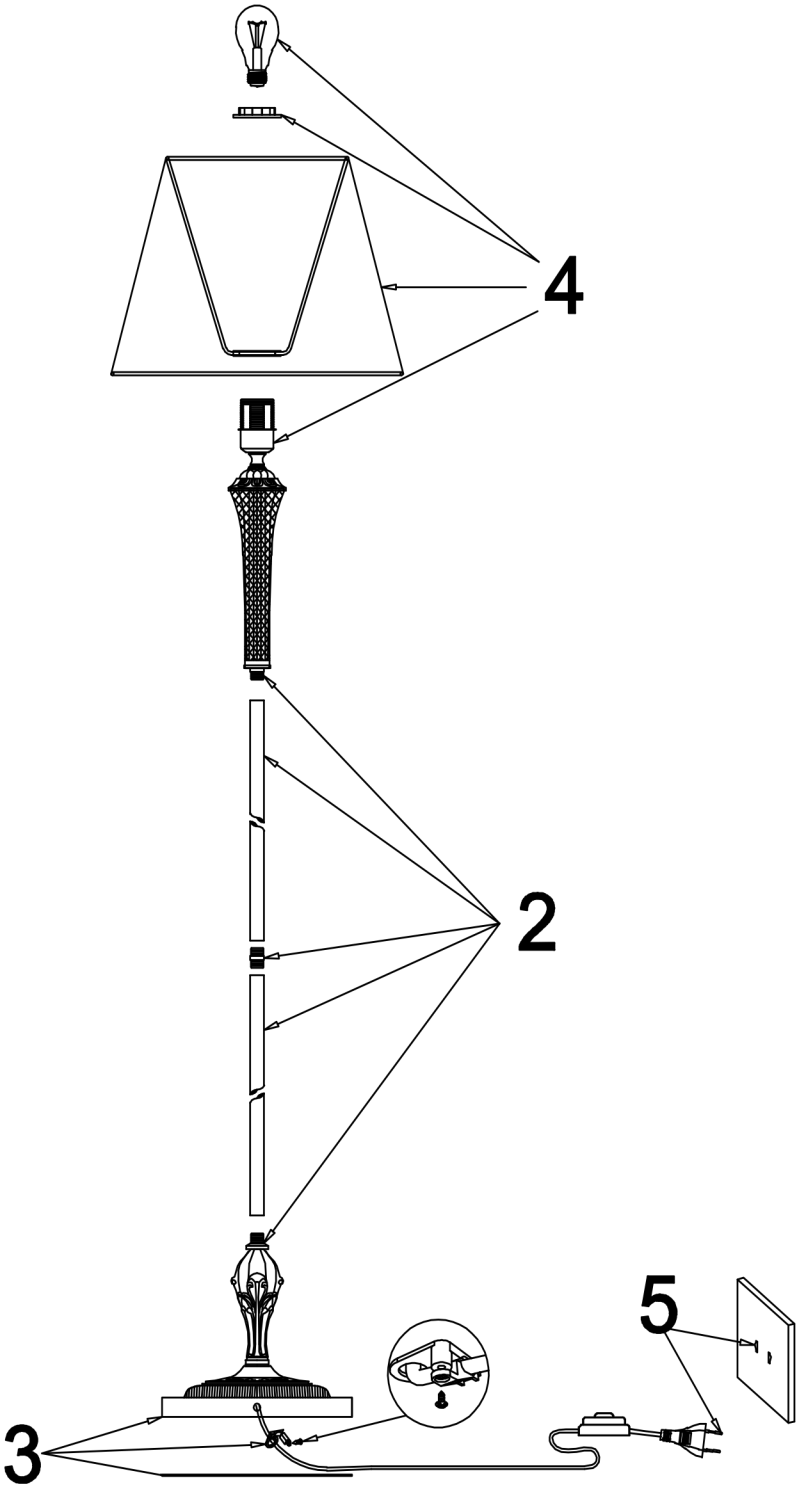
6