ARTE LAMP

ASSEMBLY INSTRUCTION

ИНСТРУКЦИЯ

A7032SP-1BK
A7032SP-1WH

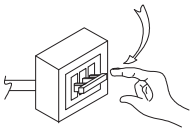

OFF ①

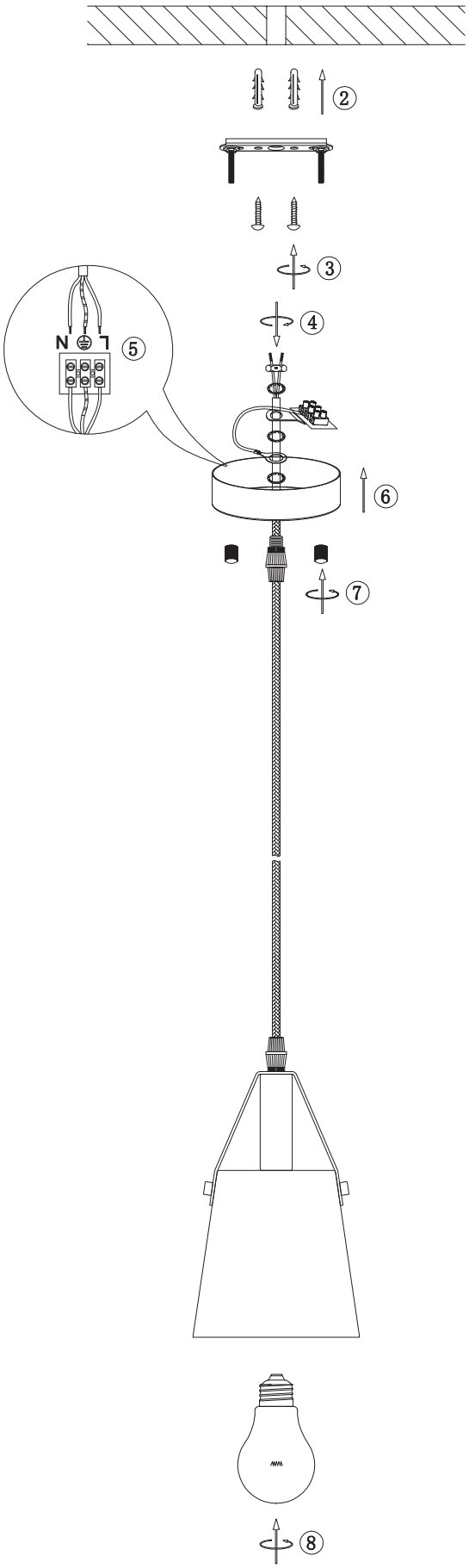

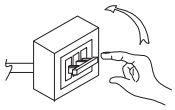

ON ⑨