ARTE LAMP

ASSEMBLY INSTRUCTION

ИНСТРУКЦИЯ
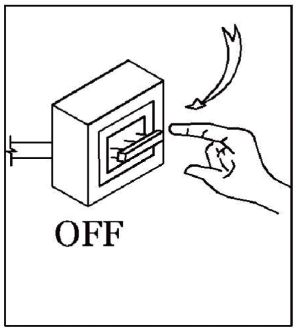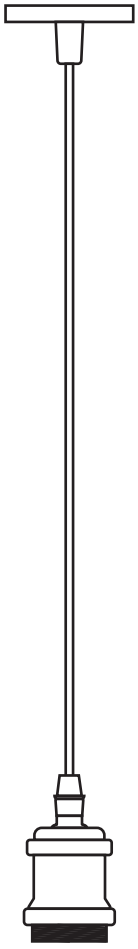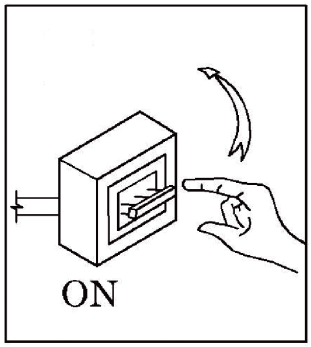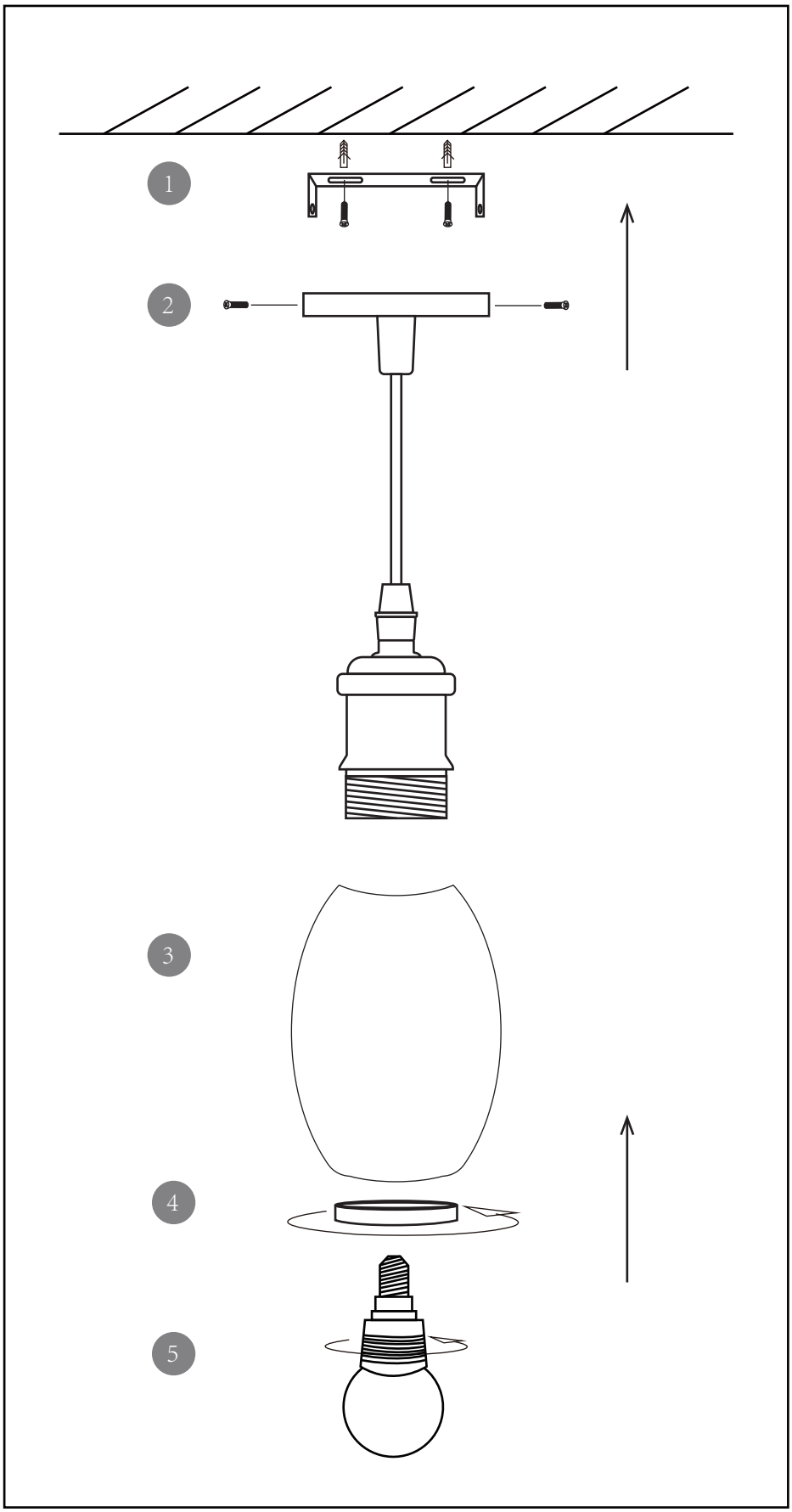
A7002SP-1