ARTE LAMP

ASSEMBLY INSTRUCTION

A4282SP-1CC

ИНСТРУКЦИЯ

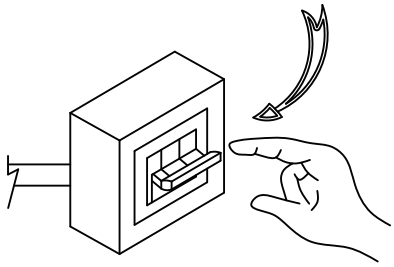

OFF 1

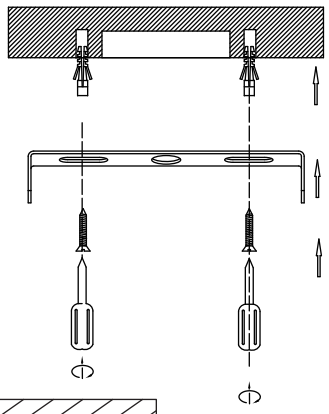

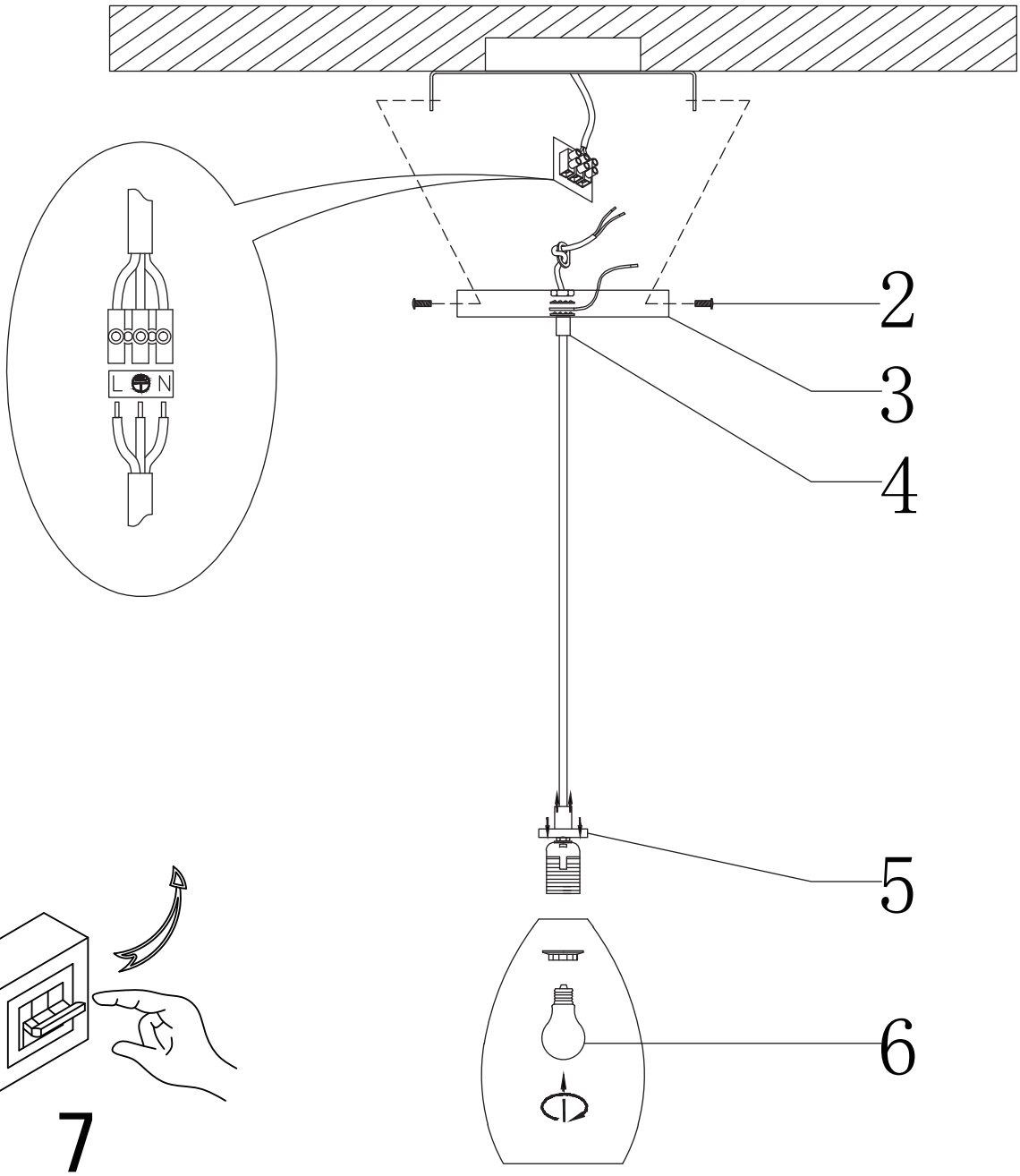

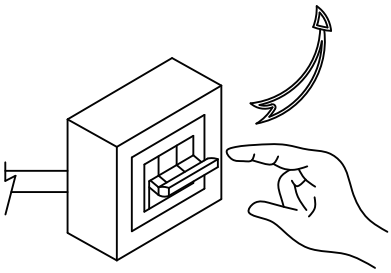

ON 7