ARTE LAMP

ASSEMBLY INSTRUCTION

A3459AP-1AB

ИНСТРУКЦИЯ

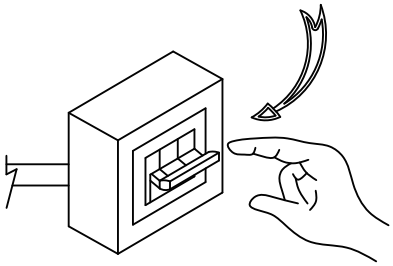

OFF 1

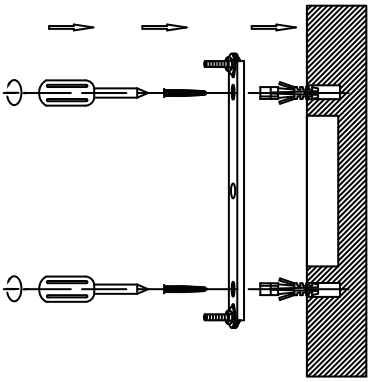

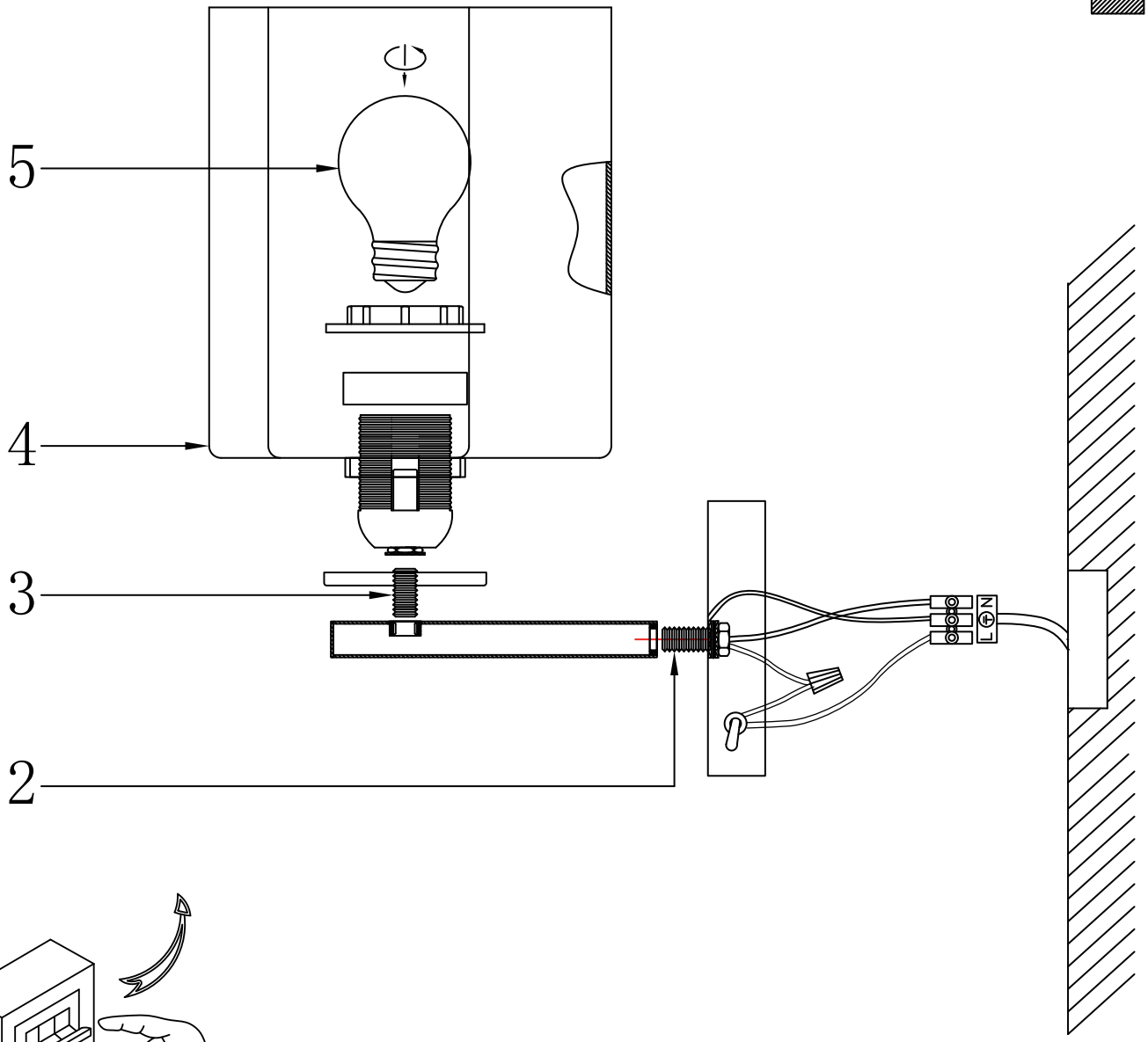

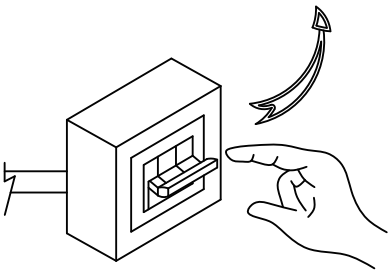

ON 6