ARTE LAMP

ASSEMBLY INSTRUCTION

ИНСТРУКЦИЯ A3302AL-2BK
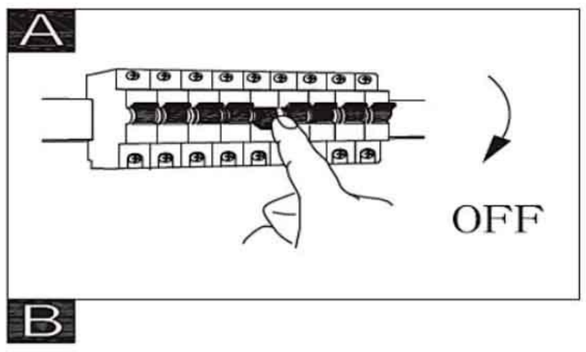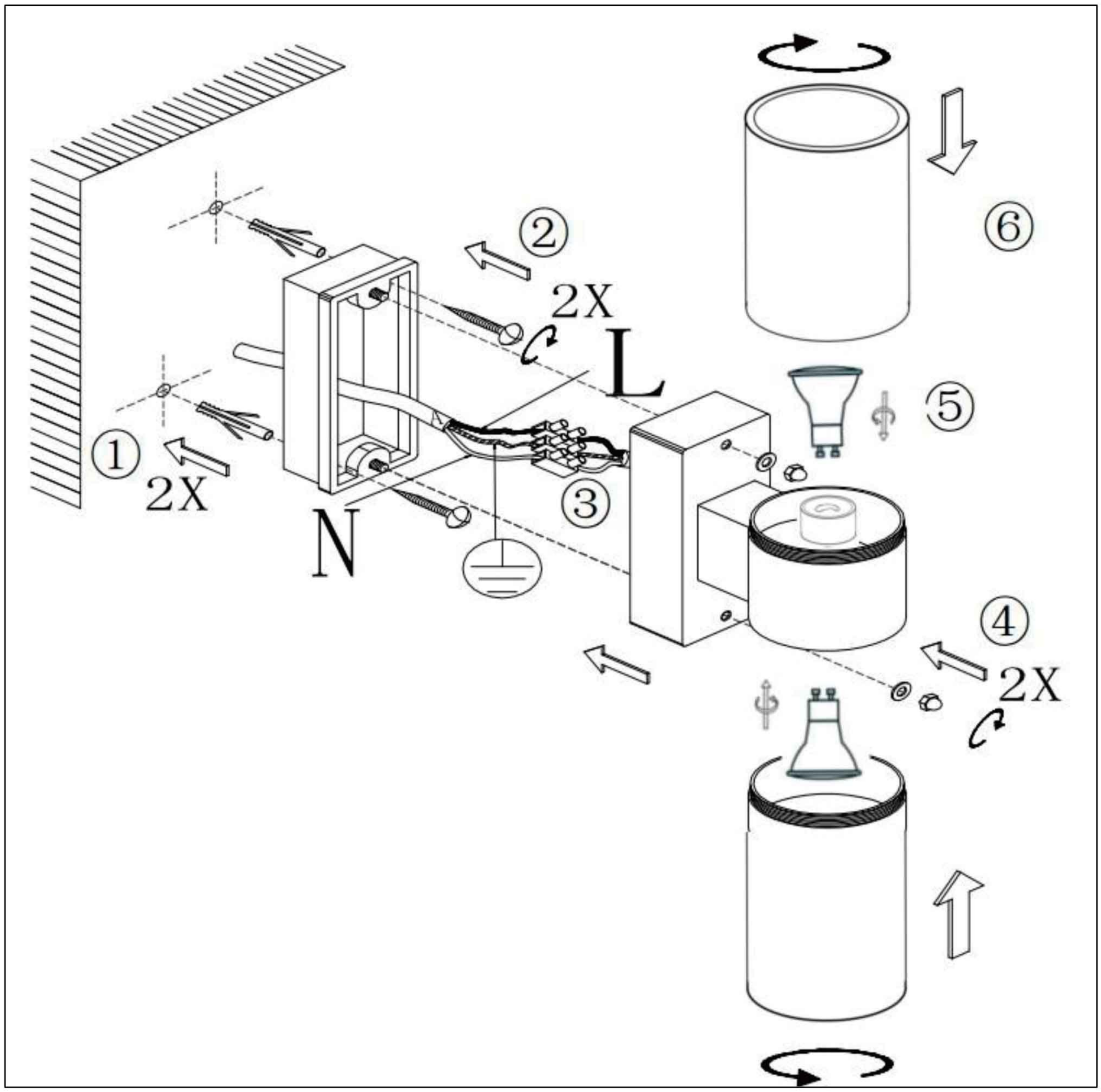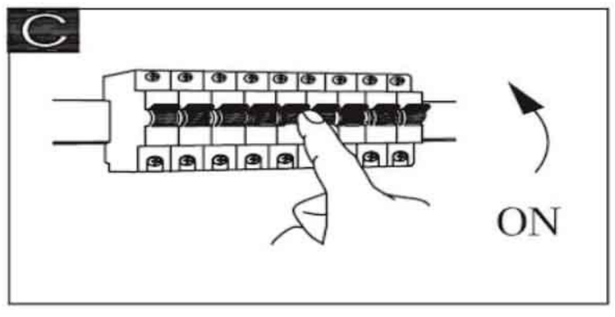
A