ARTE LAMP

ASSEMBLY INSTRUCTION
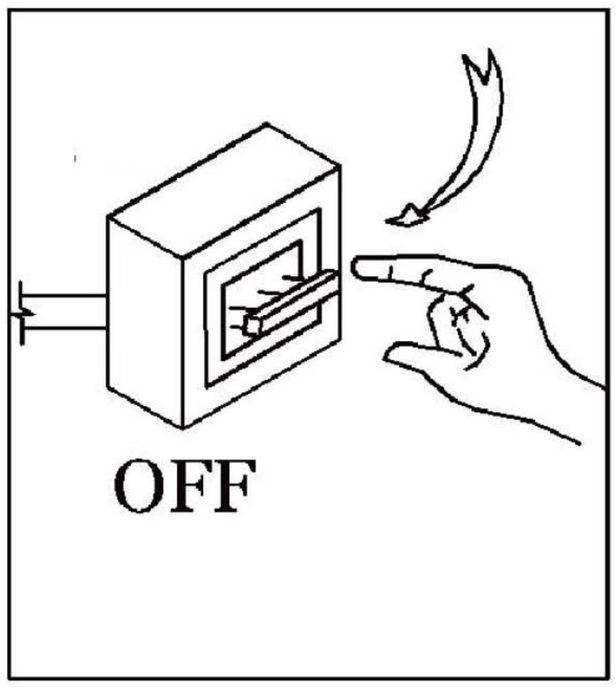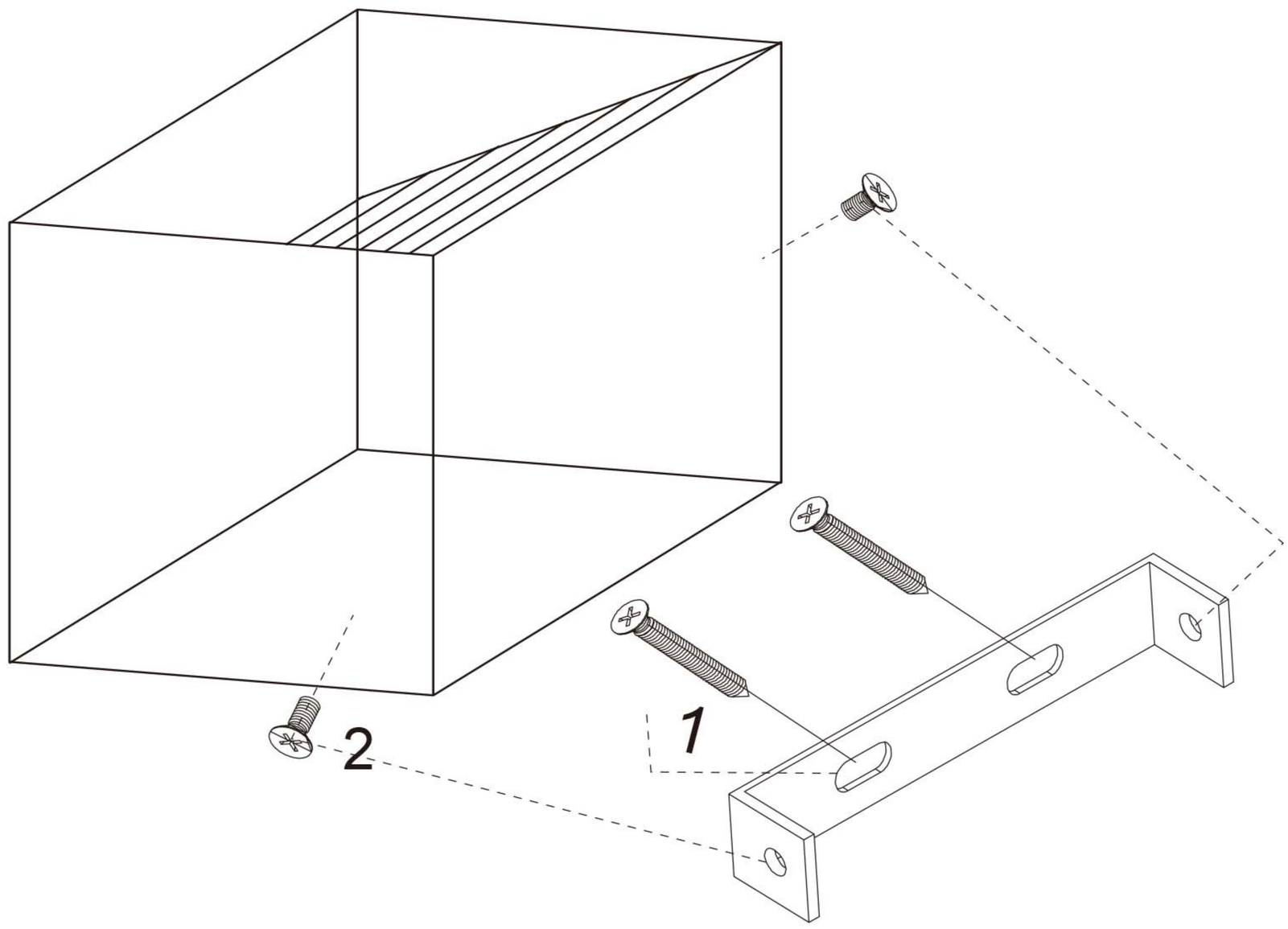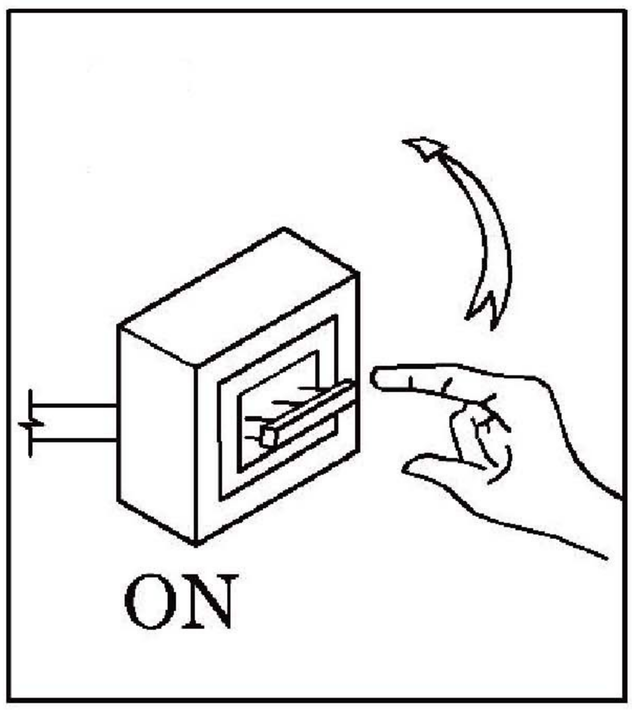
ИНСТРУКЦИЯ A1423AP-1WH