ARTE LAMP

ASSEMBLY INSTRUCTION
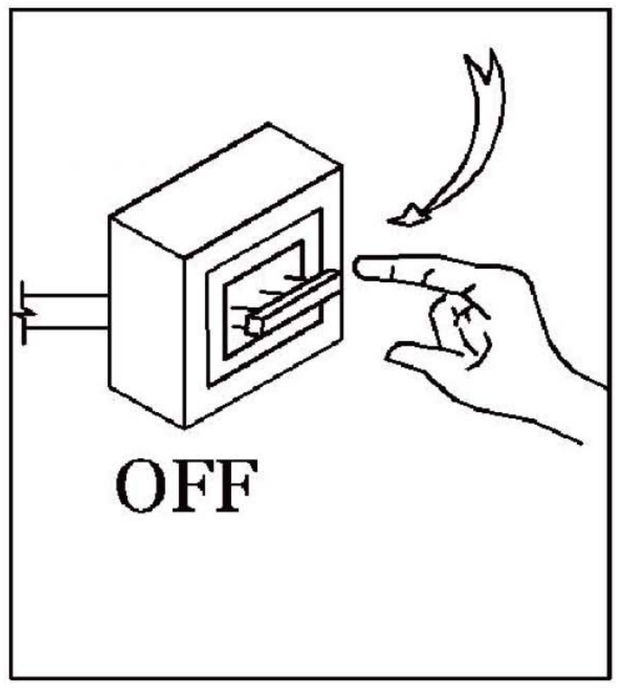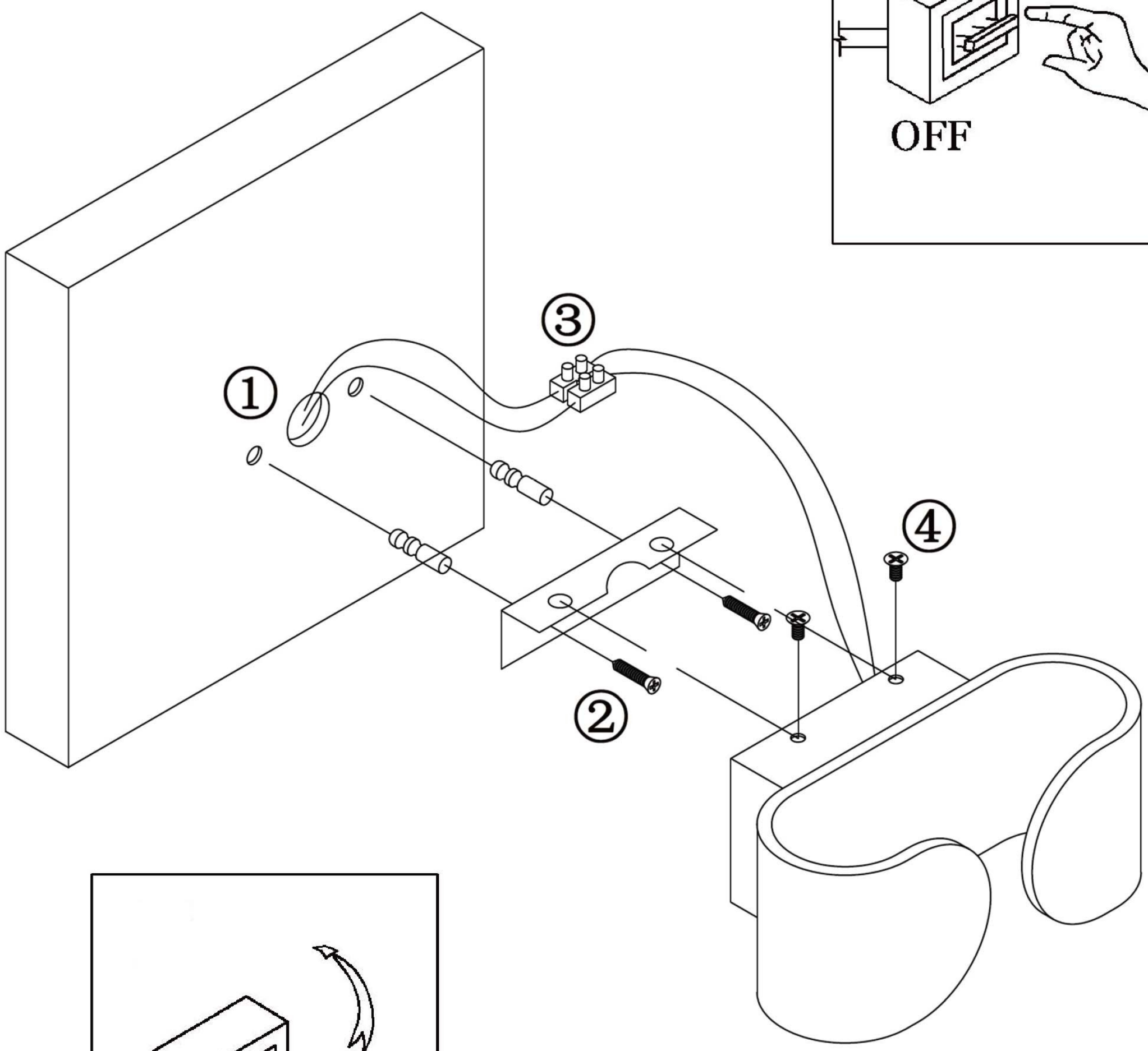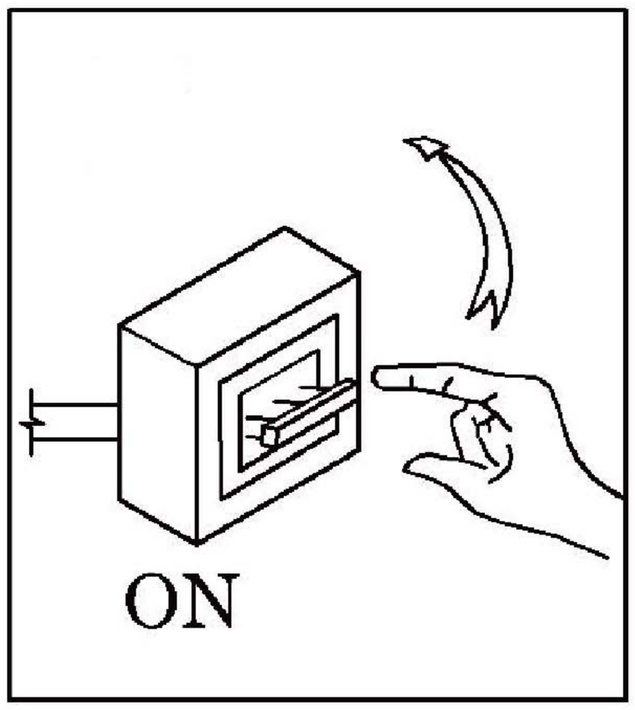
ИНСТРУКЦИЯ A1419AP-1WH