ARTE LAMP

ASSEMBLY INSTRUCTION
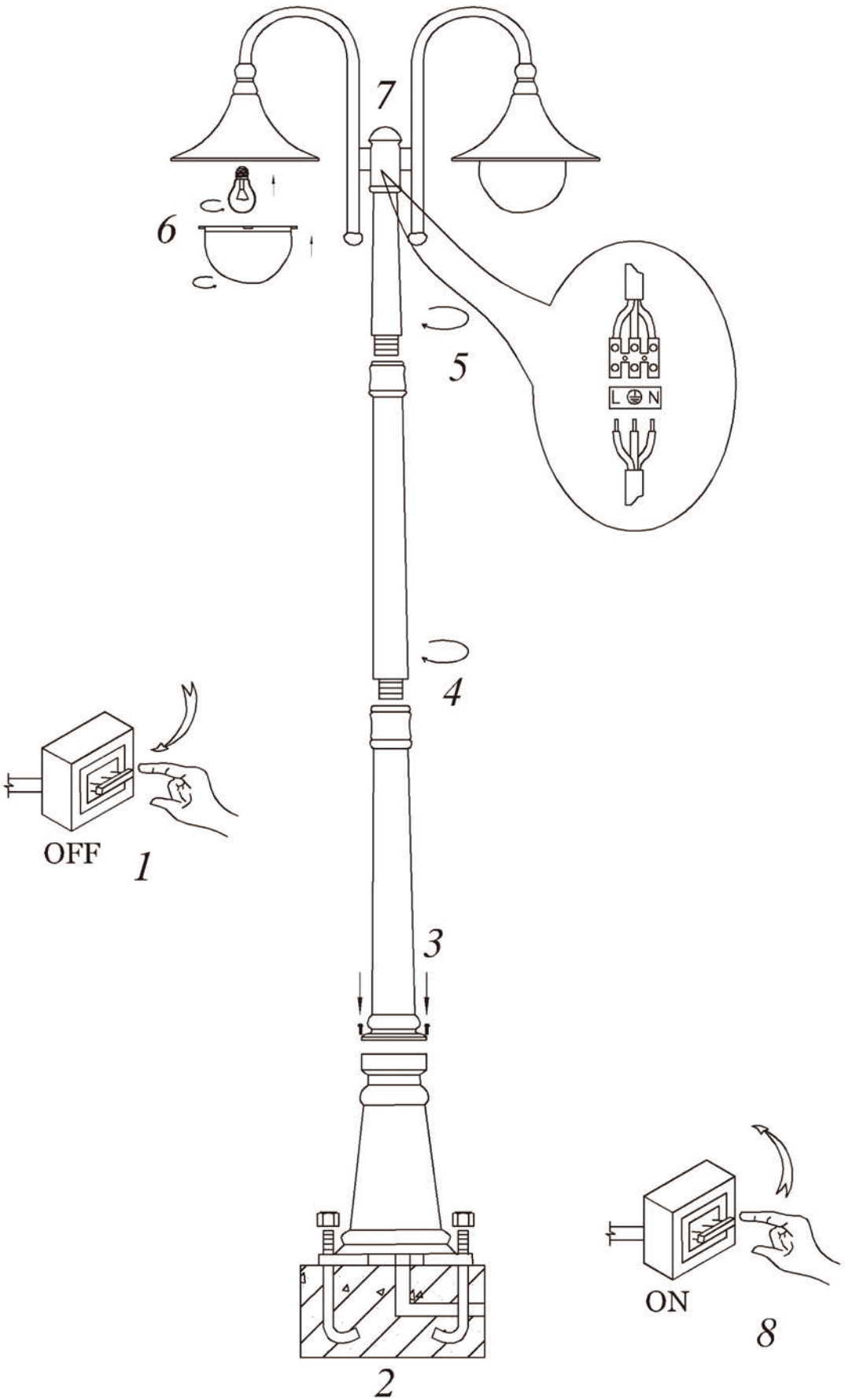
ИНСТРУКЦИЯ AL1086PA-2BG