ARTE LAMP

ASSEMBLY INSTRUCTION

ИНСТРУКЦИЯ A1008LM-6GO

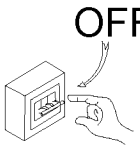

1

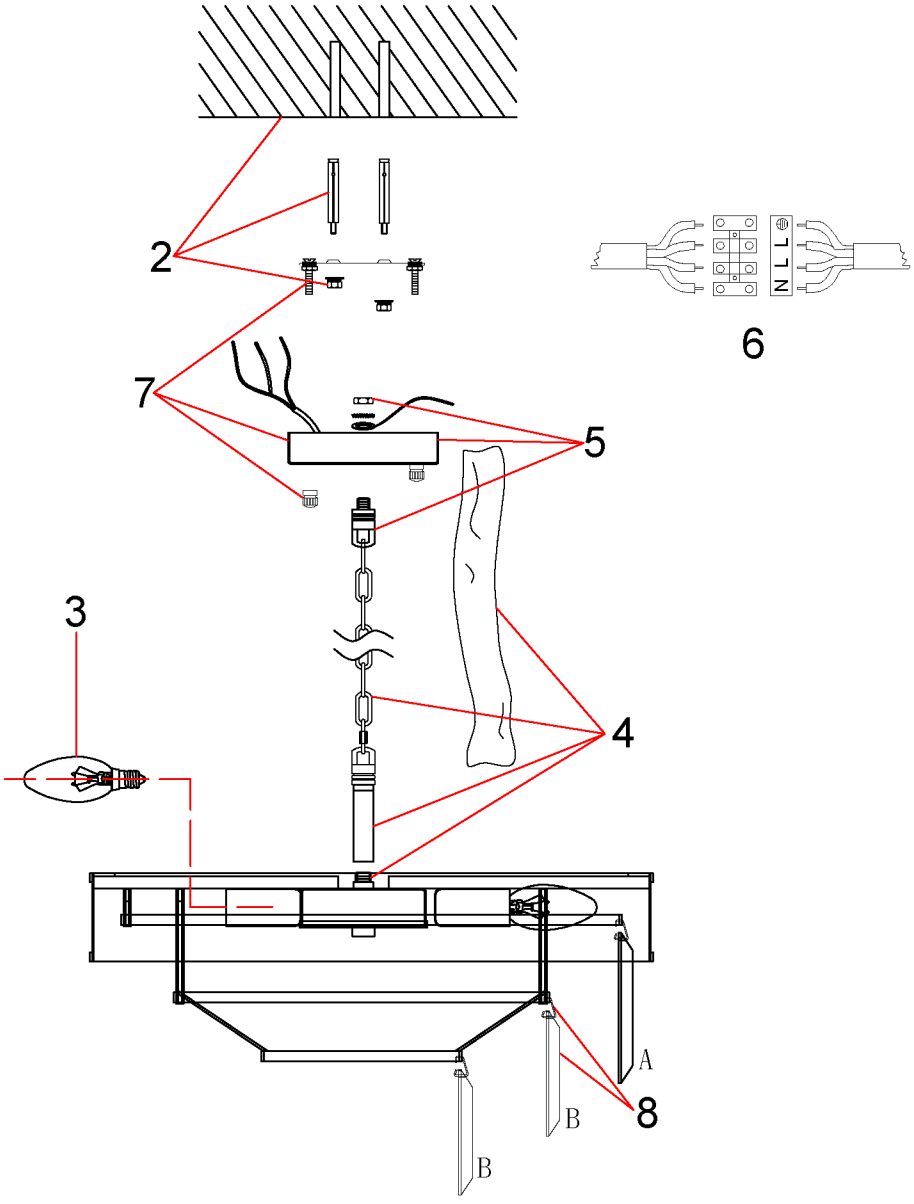

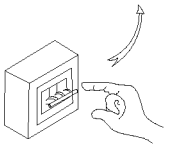
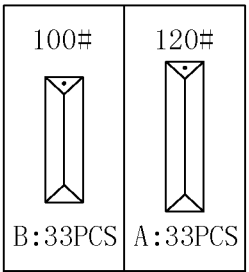
9