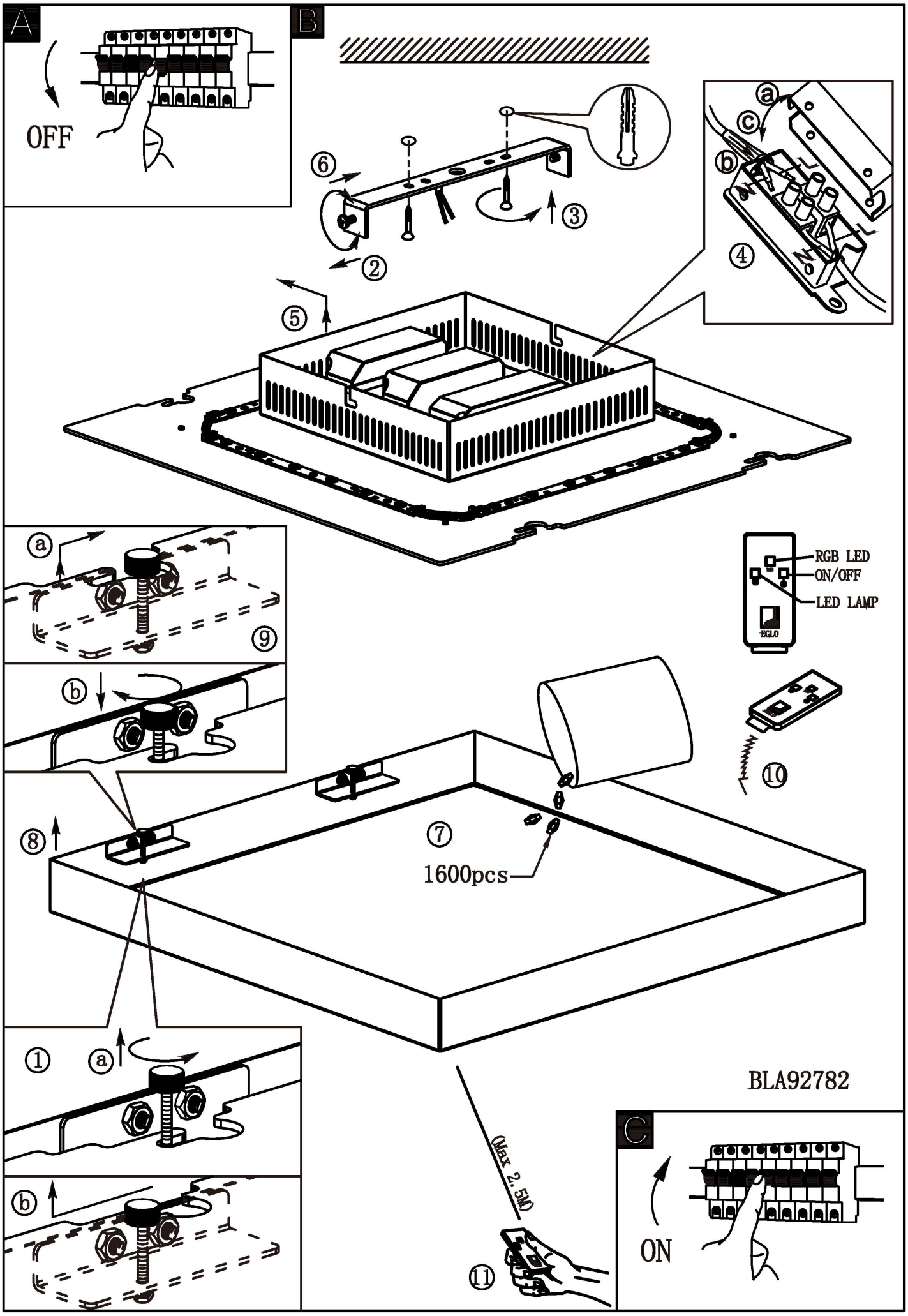
A
OFF
B
⑥
②
③
⑤
ⓐ
ⓒ
ⓑ
④
ⓐ
⑨
ⓑ
⑧
⑦
1600pcs
RGB LED
ON/OFF
LED LAMP
EGLO
⑩
①
ⓐ
ⓑ
(Max 2.5M)
⑪
BLA92782
C
ON