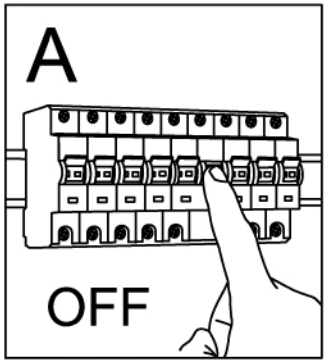
A
OFF

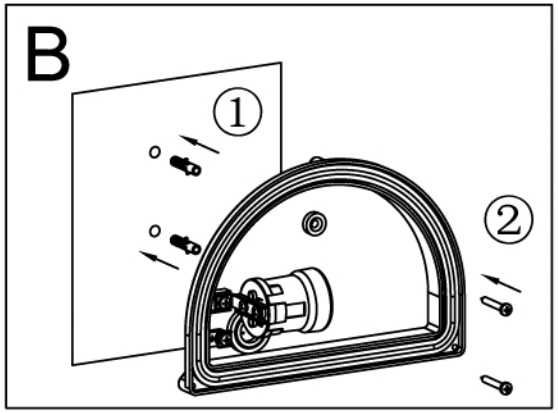
B
①
②

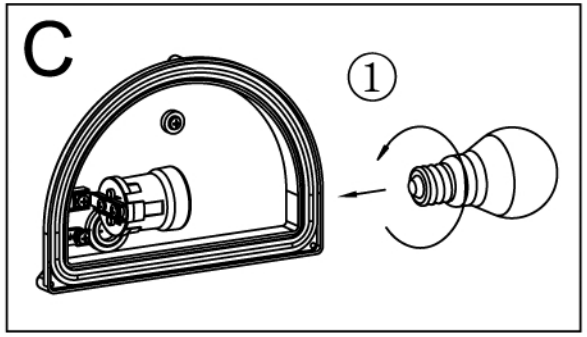
C
①

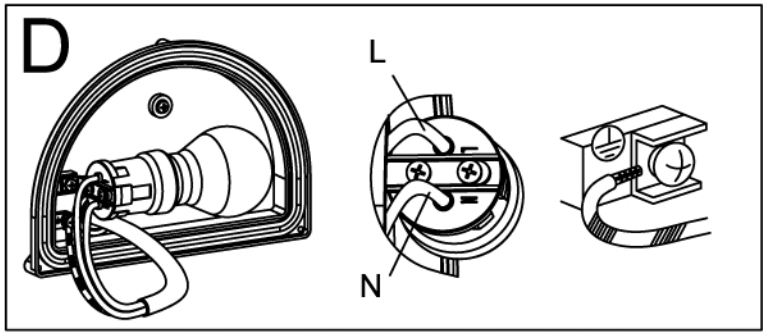
D
L
N

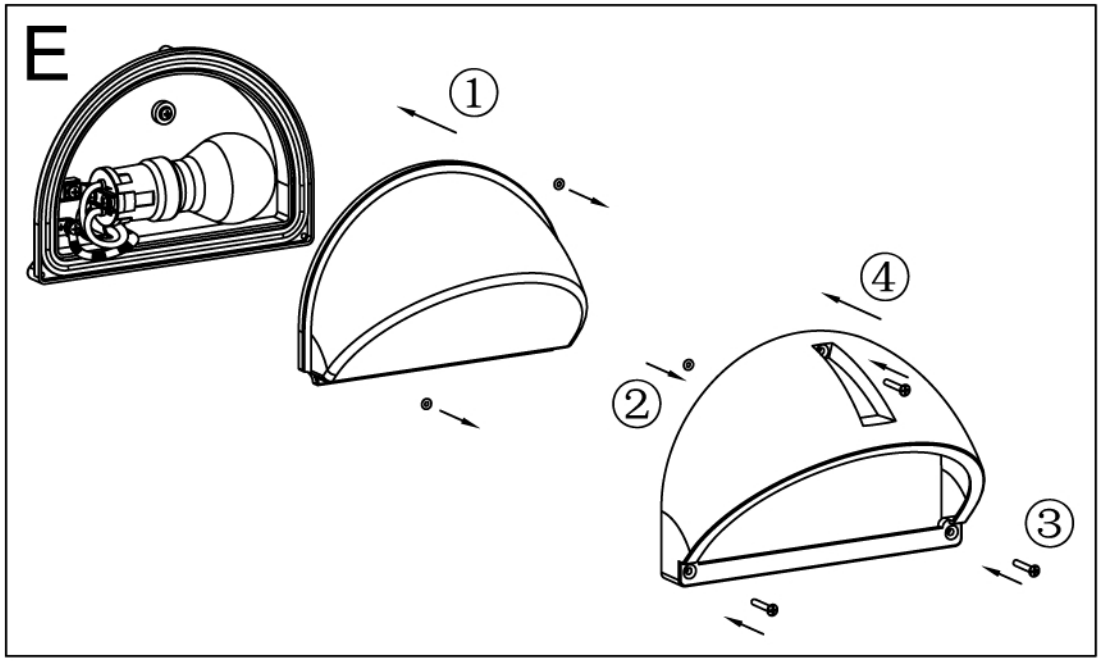
E
①
②
③
④

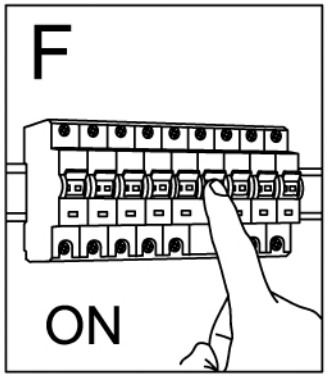
F
ON