ARTE LAMP

ASSEMBLY INSTRUCTION

A8021SP-1AB
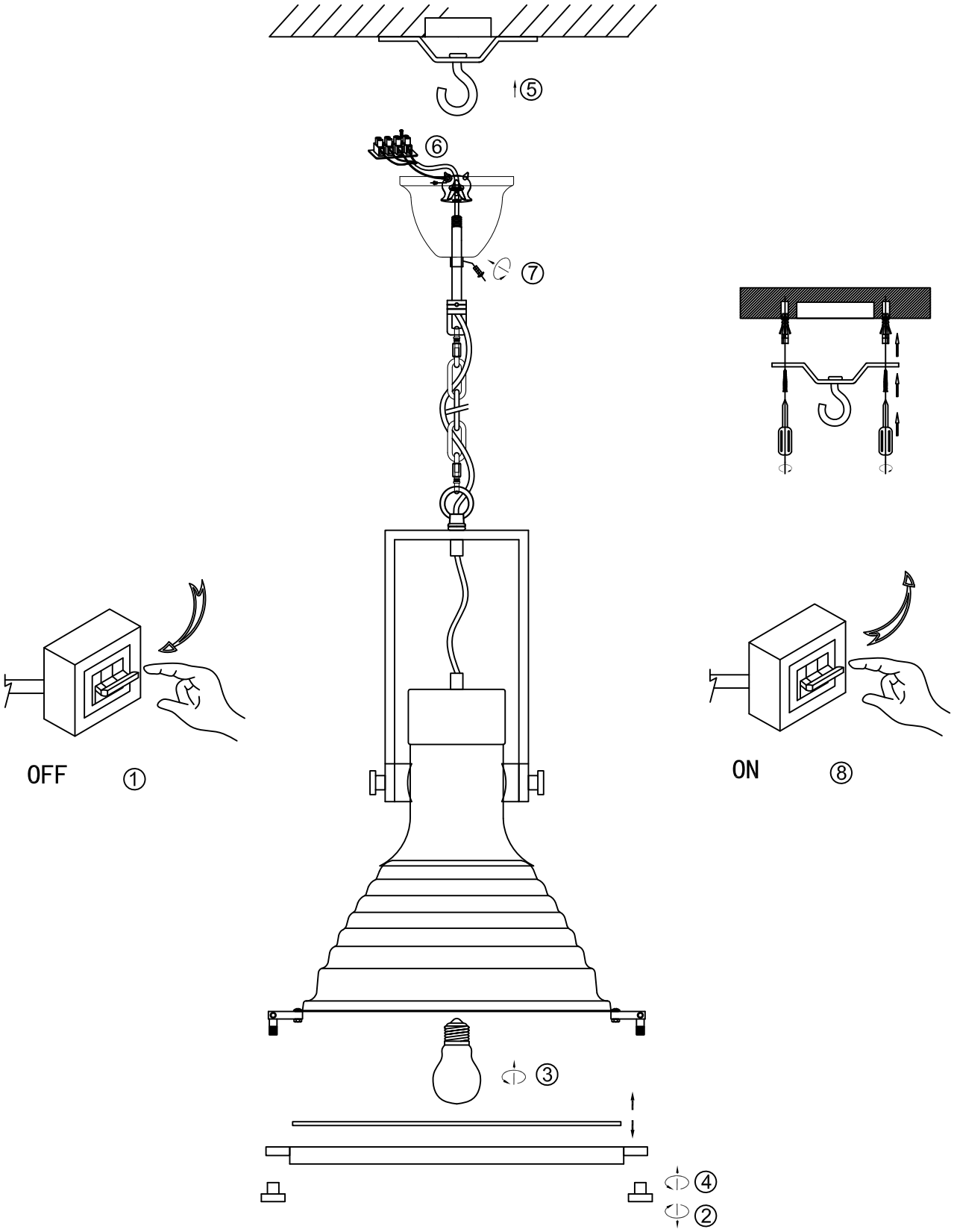
ИНСТРУКЦИЯ