ARTE LAMP

ASSEMBLY INSTRUCTION

A
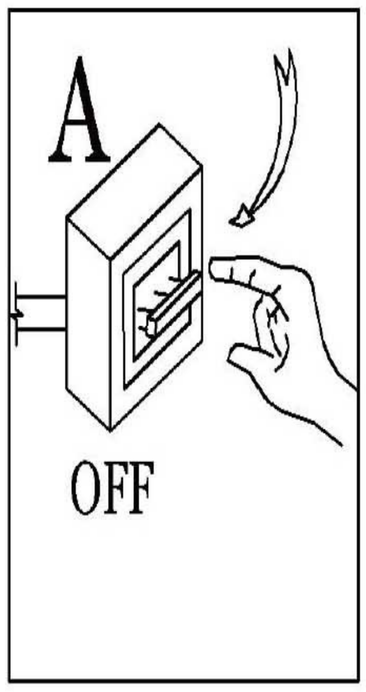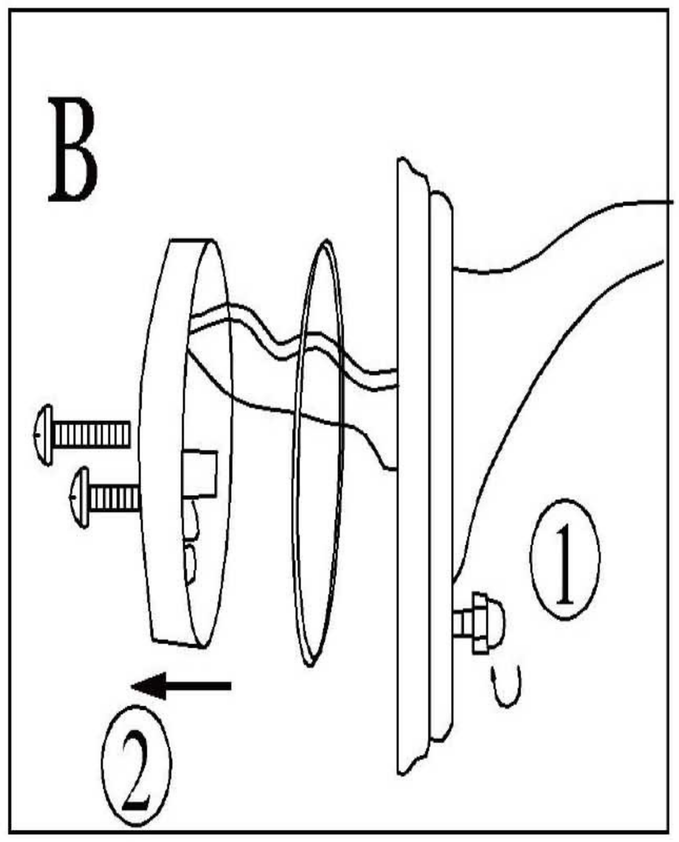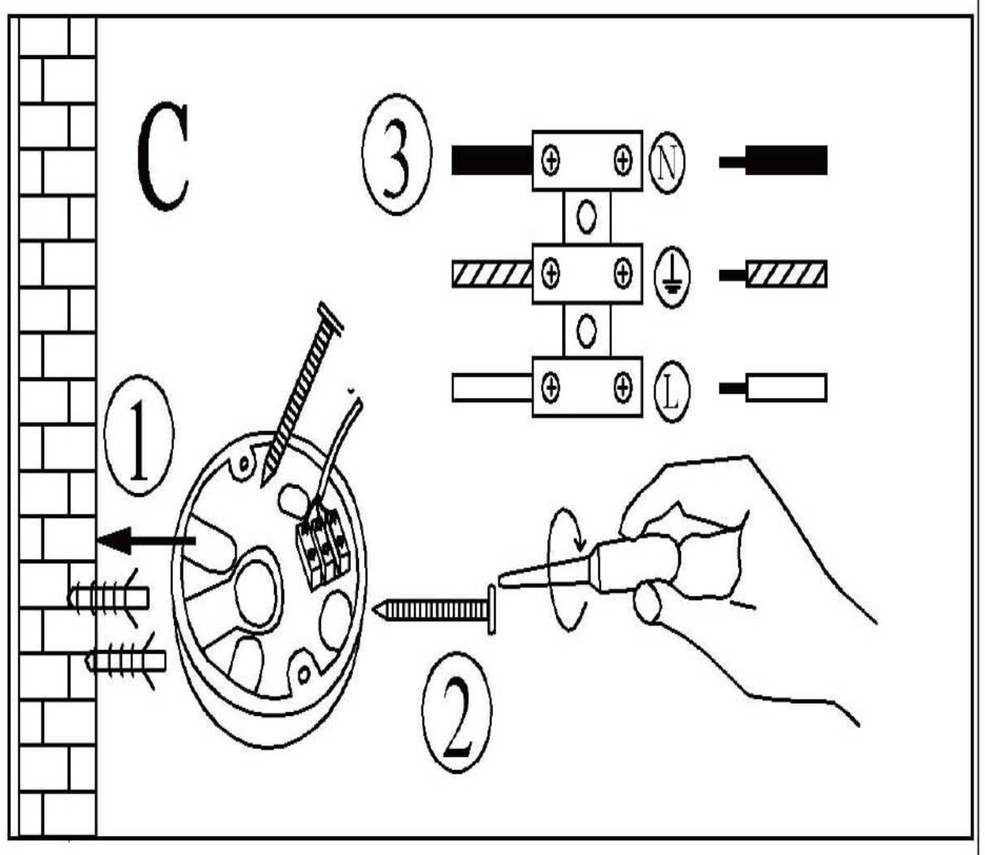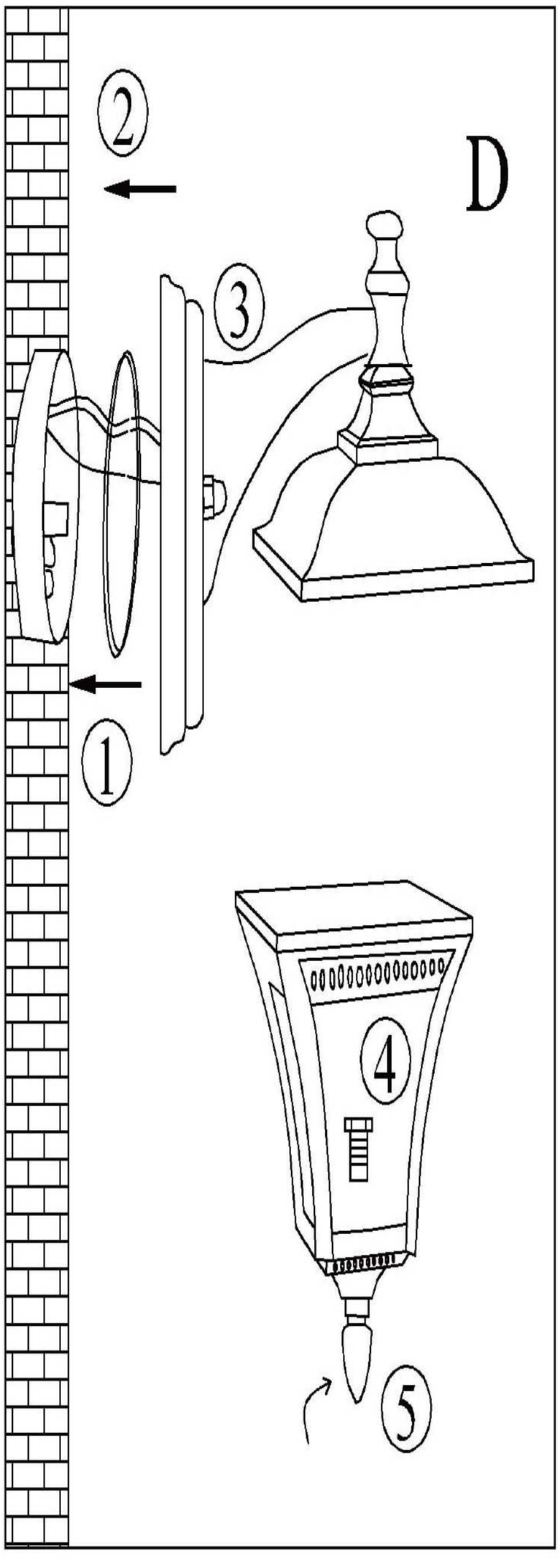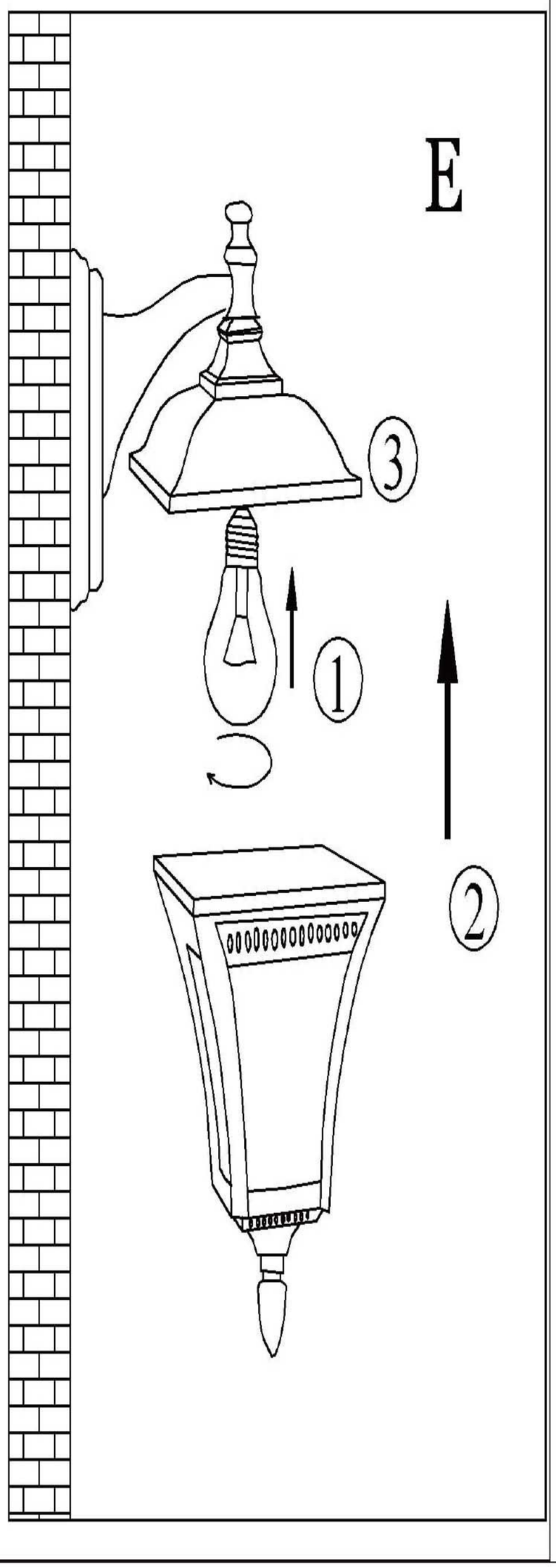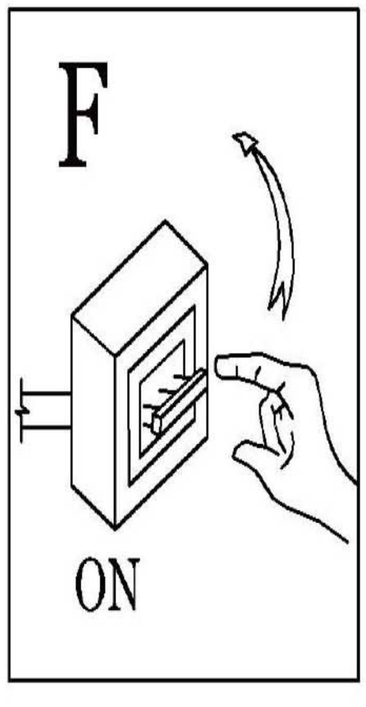
ИНСТРУКЦИЯ A3161AL-1BN