ARTE LAMP

ASSEMBLY INSTRUCTION

ИНСТРУКЦИЯ

A
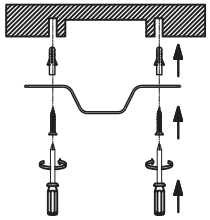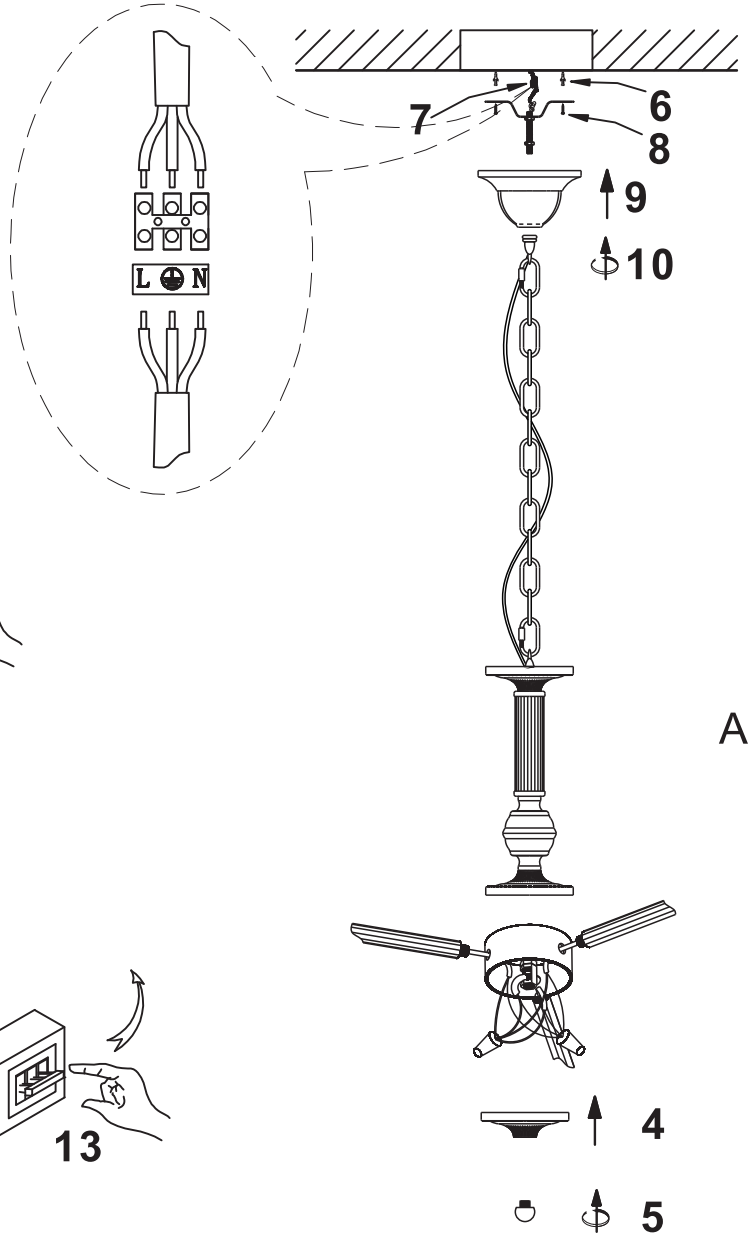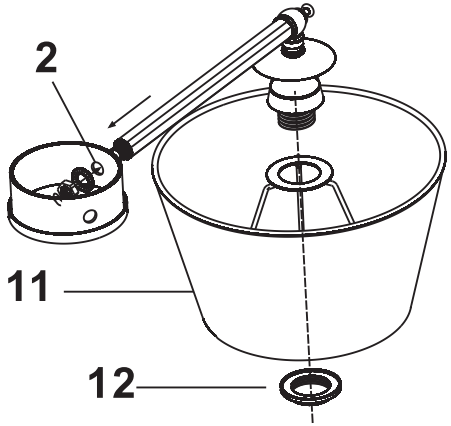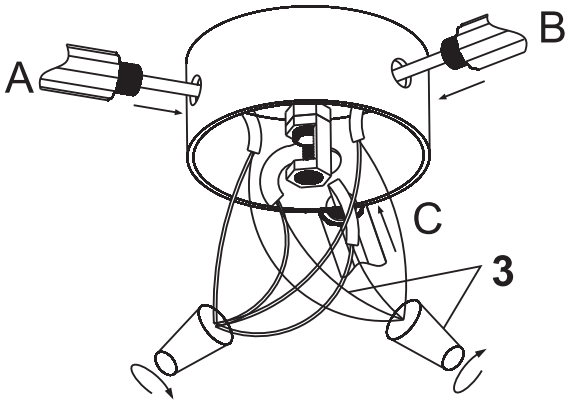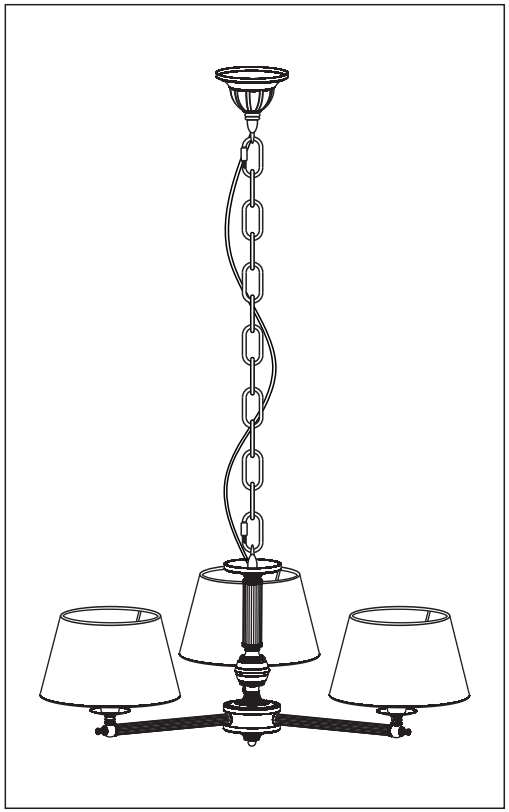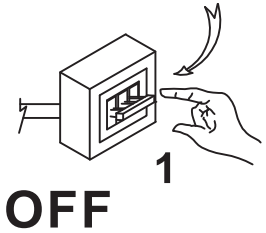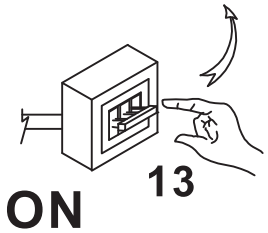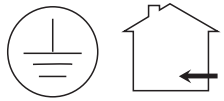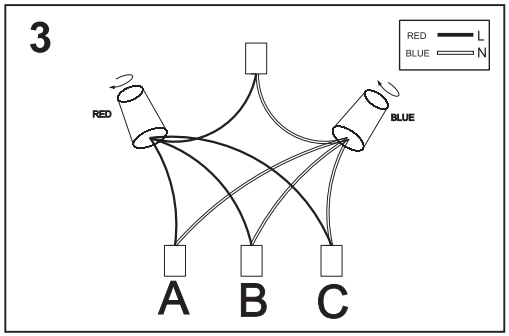
A2273LM-3