ARTE LAMP

ASSEMBLY INSTRUCTION
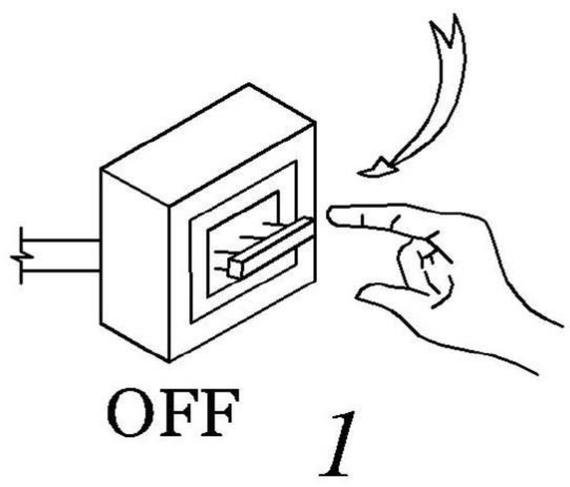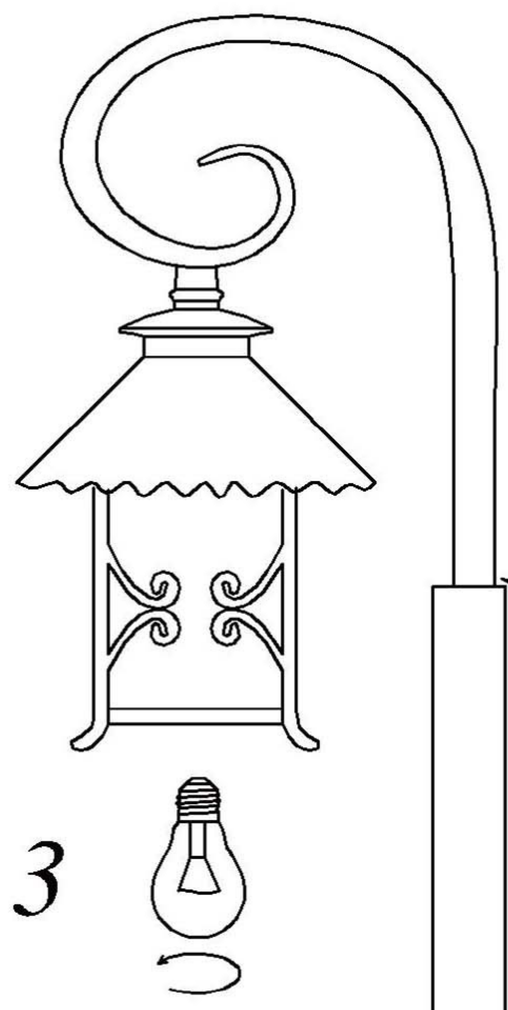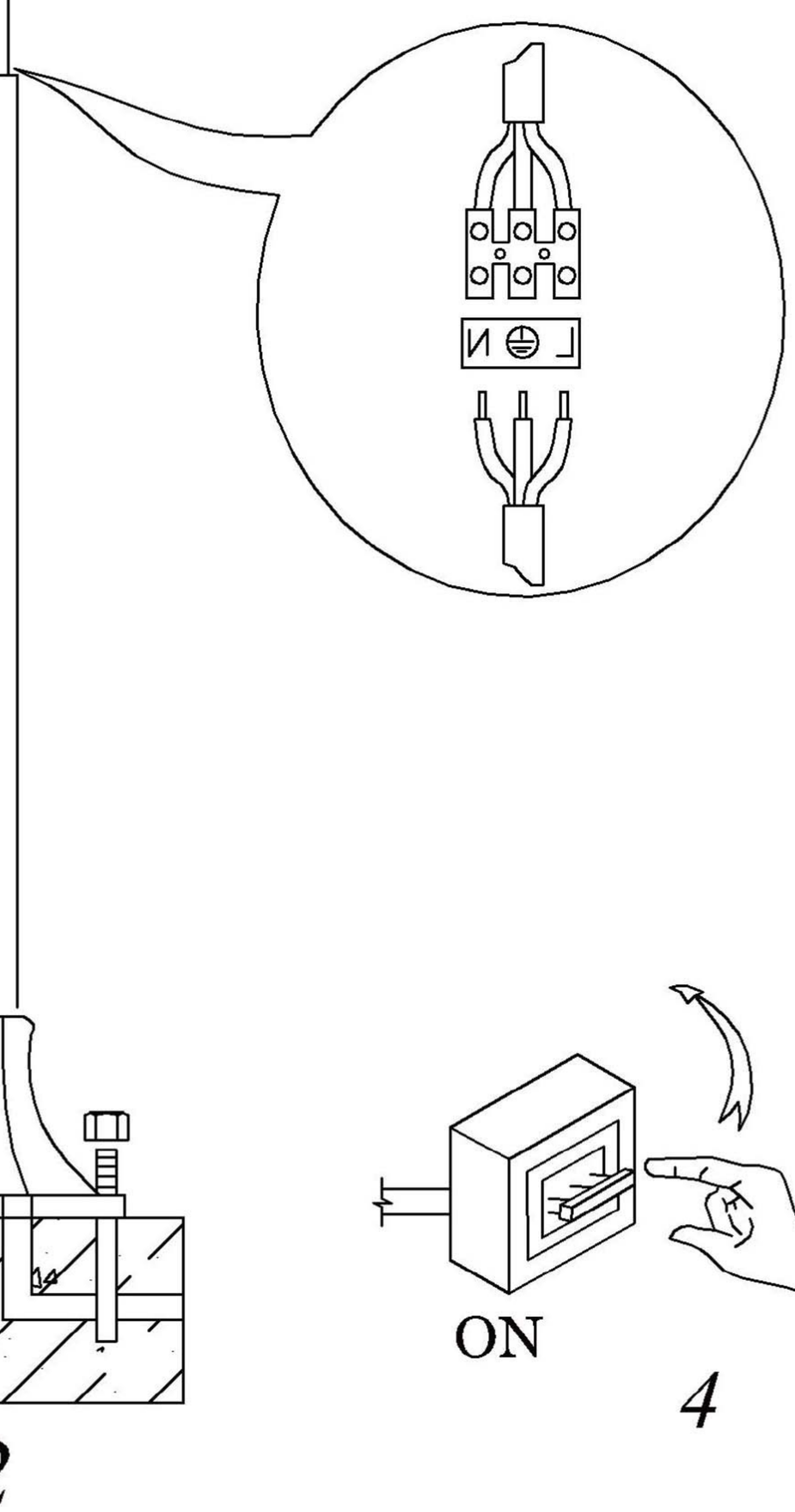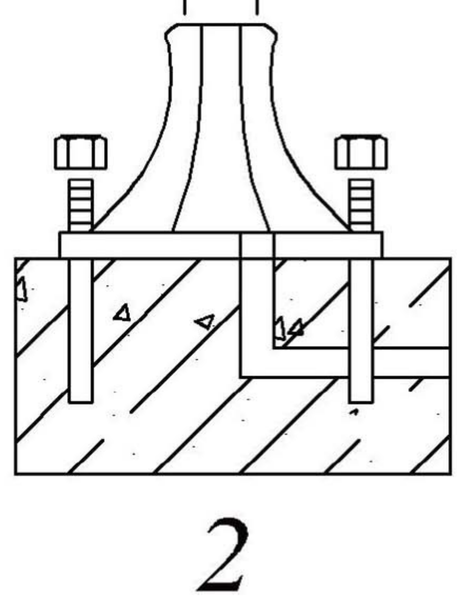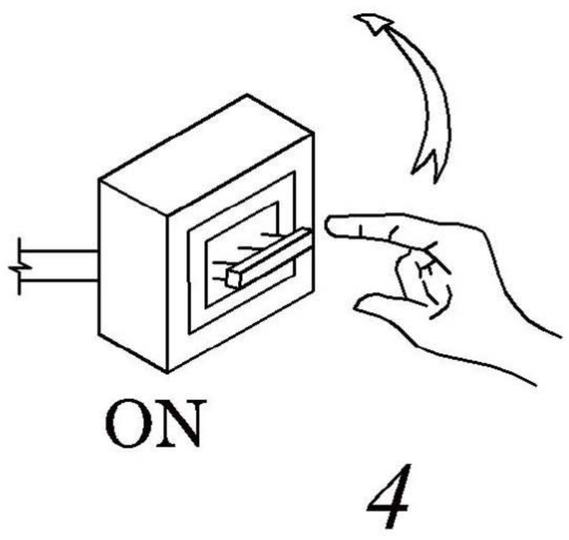
ИНСТРУКЦИЯ A1456PA-1BG