ARTE LAMP

ASSEMBLY INSTRUCTION
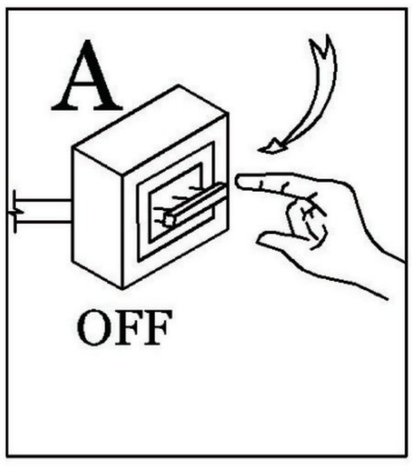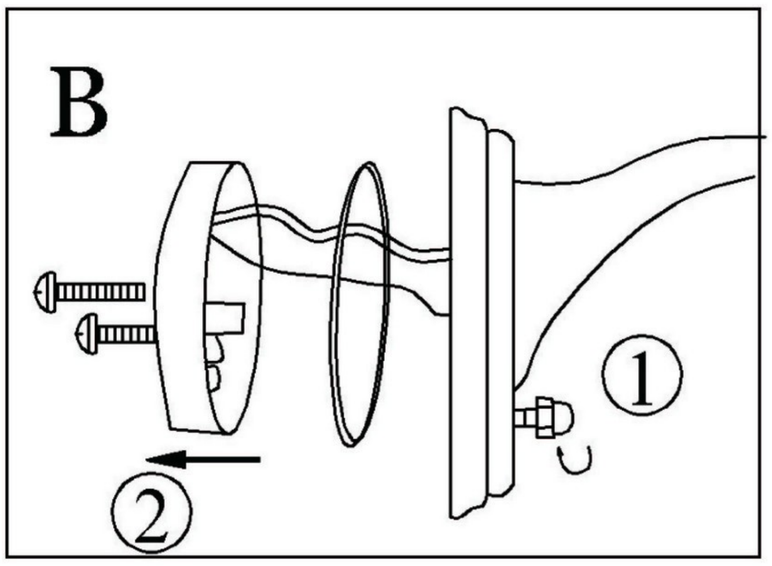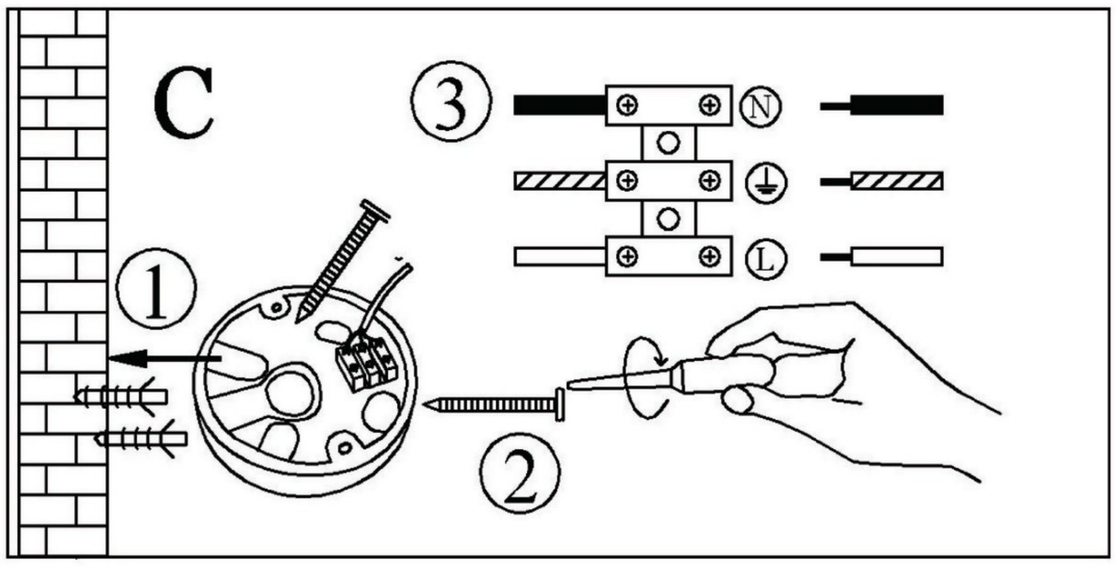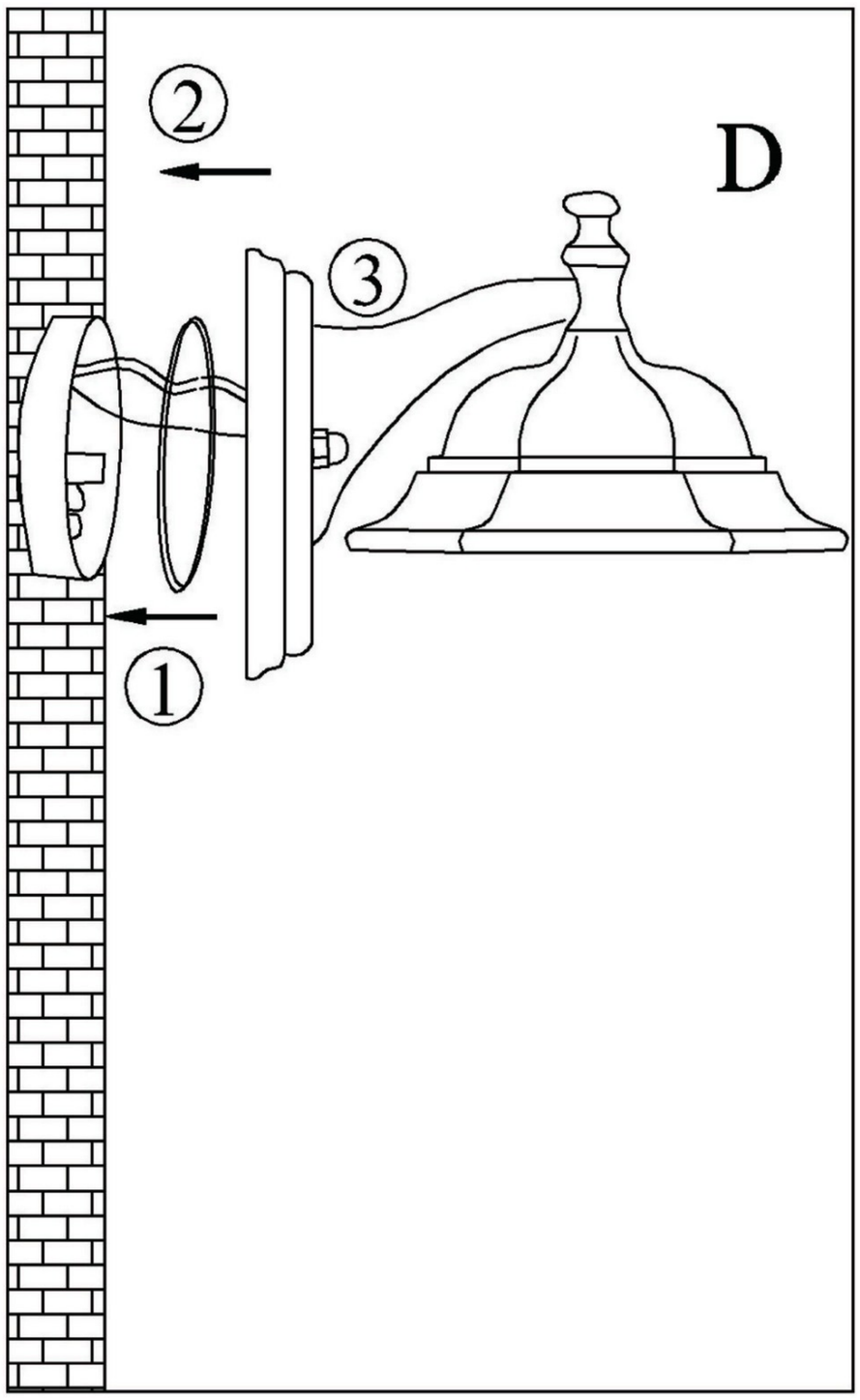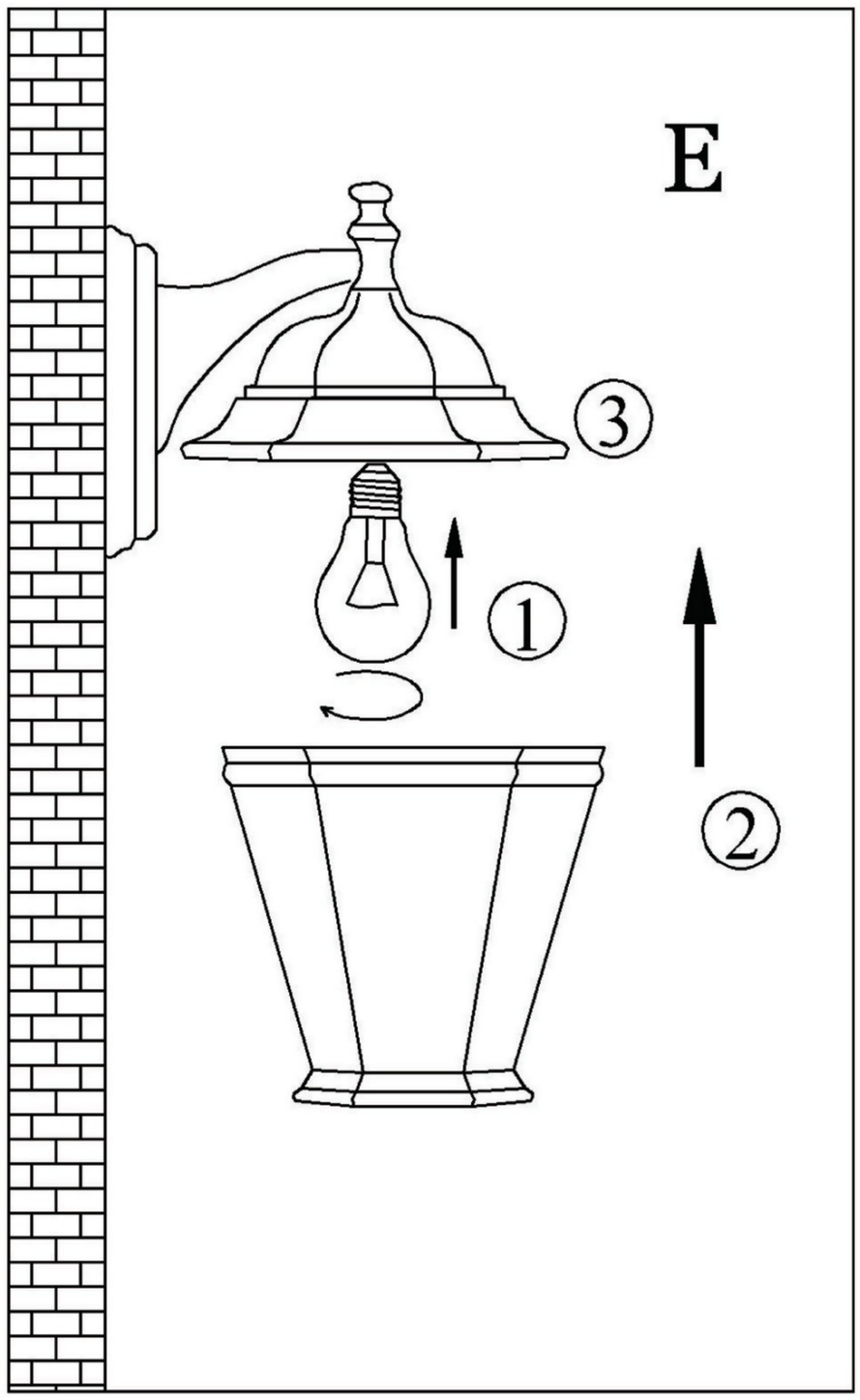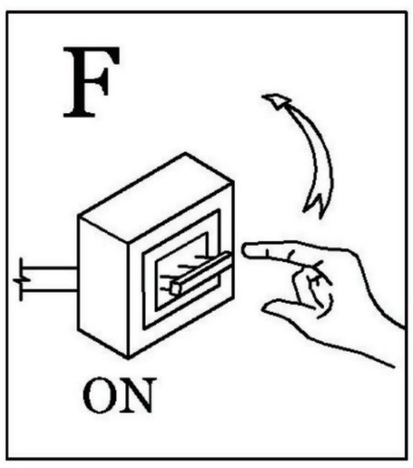
ИНСТРУКЦИЯ A1202AL-1BS